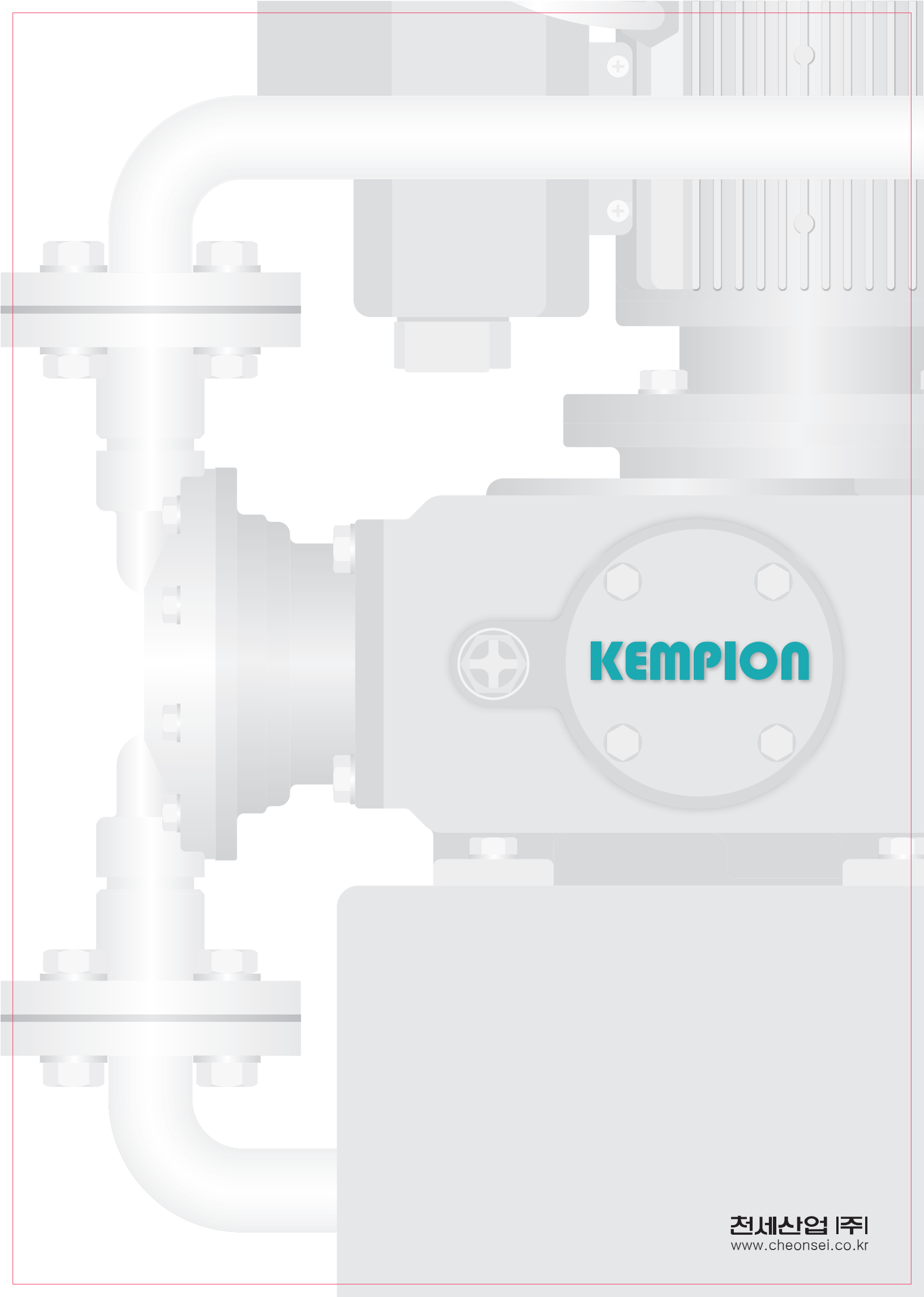

천세산업 (주)
www.cheonsei.co.kr

INDEX

4 Company's History

6 Smoothy Metering Pumps (PKD, PKP)

14 Diaphragm Metering Pumps (KD)

18 Midium Sized Diaphragm Metering Pumps (KM)

20 Automatic Control Metering Pumps (KA)

22 Small Diaphragm Metering Pumps (KS)

26 Solenoid Metering Pumps (SP)

34 Hydraulic Bypass Metering Pumps (BKH)

38 Plunger Metering Pumps (KP)

42 Drum Pumps (DR)

46 Digital pH/ORP Controller MESTAR (PH)

ISO9001

KEMPION Metering Pumps for 30 years

TO INNOVATION

2015
BKH

2009
DR

2004
PKD

1998
KD

1993
AX

2012
SP

2006
BLDC

2003
KM

1997
KP

1986
BX

Company's History

1980s

- Establishment of CHEONSEI IND. CO., LTD.
- Development of MX Magnetic Drive Pumps
- Development of BX Small Metering pumps & P-808SE pH/ORP Controller
- Construction completion of Banwol Factory

1990s

- Development of KEMPION AX Small Diaphragm Metering Pumps
- Acquirement of KT Mark
  (Precise Manufacturing Technology for Small Diaphragm Pumps)
- Establishment of Pumping Technology Labs.
- Development of KEMPION KP Plunger Type Metering Pumps
- Acquirement of ISO 9001 Certificate
- Development of KEMPION KD Diaphragm Type Metering Pumps

2000s

- Development of Smoothy(Pulseless) Metering Pumps
- A development of BLDC Automatic Liquid Control Metering Pumps
- Acquirement of Patent for Compensation Method of Constant Velocity Cam related
  with Smoothy(Pulseless) Metering Pumps
- A development of KEMPION DR Drum Pumps
- Acquirement of CE Mark(MX, AX, KS, KD, KM, PKD, & PKP Series)

ISO9001

2010s

- Acquirement of Patent for Hydraulic Metering Pumps
- Acquirement of Patent for Smoothy(Pulseless) Metering Pumps
- Acquirement of NEP(New Excellent Products) Certificate for Continuous Flow Metering Pumps from the Ministry of Commerce, Industry & Energy
- Development of KEMPION SP Solenoid Metering Pumps
- Acquirement of Performance Certificate for Smoothy(Pulseless) Metering Pumps from the Ministry of Commerce, Industry & Energy
- Acquirement of Good Design Certificate from SP Solenoid Metering Pumps
- Development of KEMPION BKH Hydraulic By-pass Type Metering Pumps
- Acquirement of Patent for BKH Hydraulic By-pass Type Metering Pumps

Global Network & Installation Site of Pumps

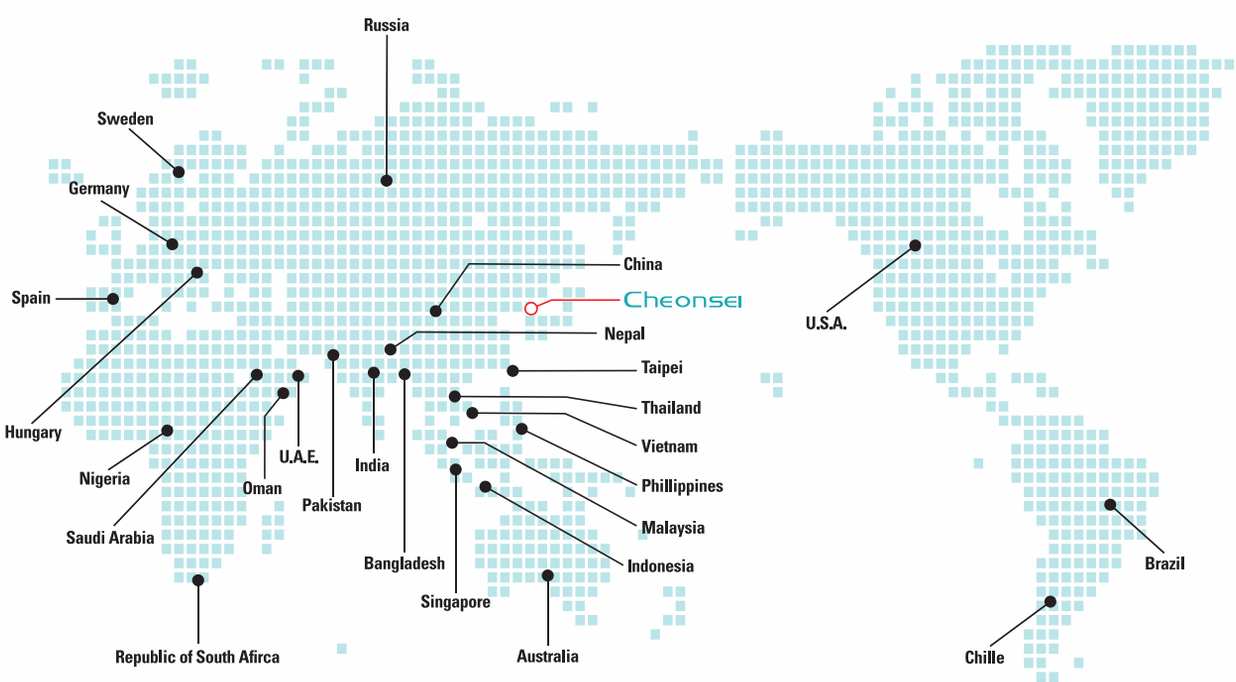

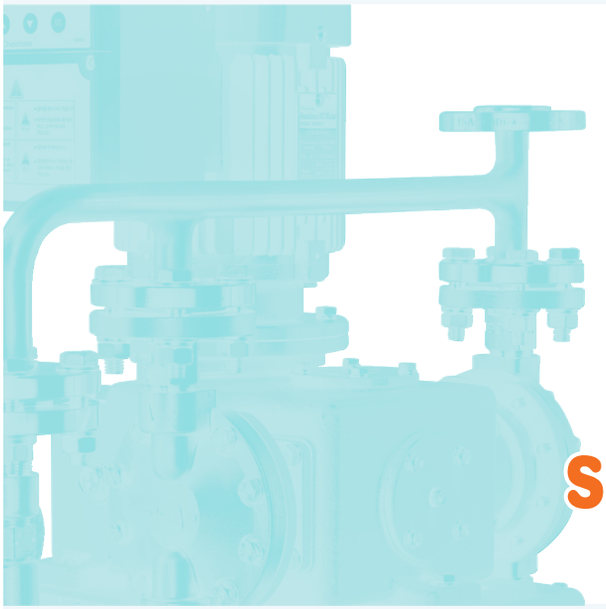

ISO9001

KEMPION

SMOOTHY Metering Pumps

PKD

Diaphragm Type Continuous Flow Metering Pumps by using Constant Velocity Cam

Features & Applications

- Attaching BLDC Motor of high control ability
- Increased confidence of discharge capacity by RPM Feed Back Control
- Proportion remote control by 4~20mA Input Signal
- No need for concern about motor damage at low speed operation
- Simplified electric equipments, possible to control the discharge rate to min. 10% operation of full scale
- AIR CHAMBER FREE!

Model Code

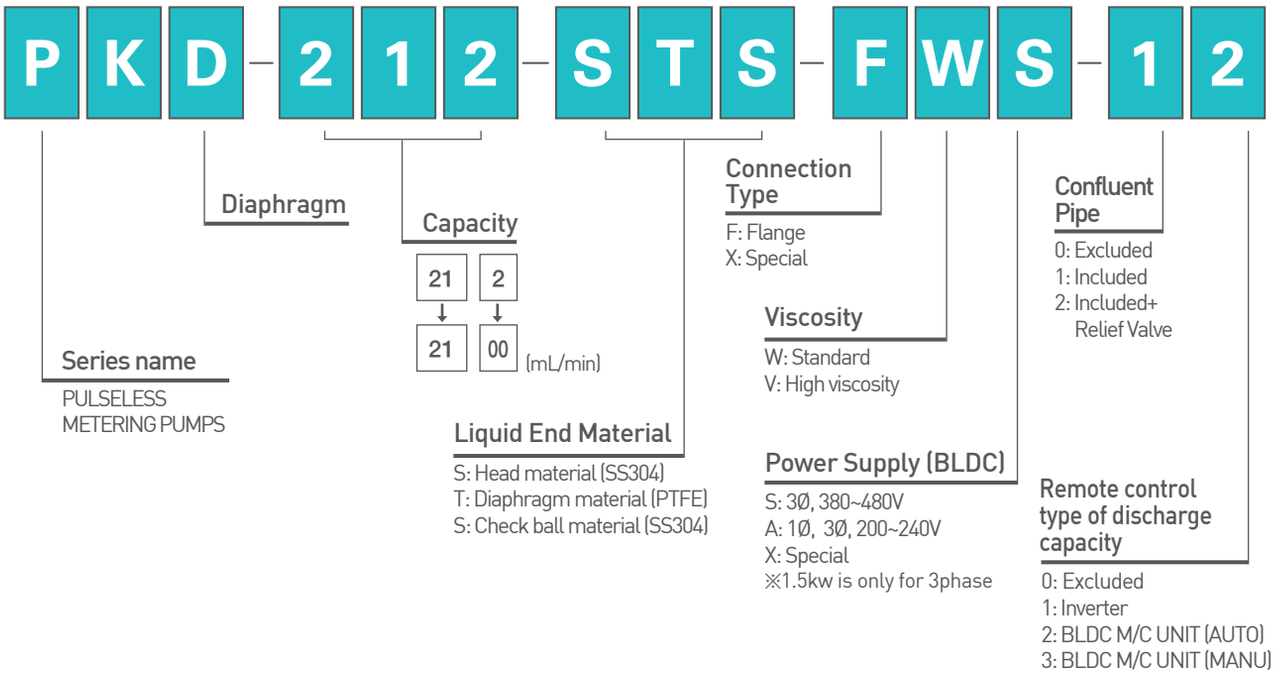

Standard Specifications

Specifications \ Model		PKD - Series													
		-500	-121	-241	-521	-102	-212	-412	-702	-143	-113	-203	-243	-333	-423
Max. Capacity (mℓ/min)		50	120	240	520	1040	2100	4100	7000	14900	11200	20700	24000	33000	42000
Max. Discharge Pressure (bar)		10						8	5	3	7	5	7	5	3
Pulse Rate (%) F/S		±5.0													
Stroke Length (mm)		3	4		6				10			15	12.5	17.5	
Stroke Number (SPM)		58		116	58	116	58	116	58	116	87				
Max. Liquid Temp. (°C)		STS, 6T6 : 0~80°C / PTC, FTC : 0~50°C / Ambient temperature : 0~40°C													
Connection (Flange)		KS 10K 15A							KS 10K 25A				KS 10K 40A		
Discharge Volume Controller (BLDC M/C UNIT)	Driver	Power Supply			200V class : 1Ø, 3Ø, 200~240V 400V class : 3Ø, 380~480V										
		Input signal (Auto)			RPM : DC4~20mA RUN/STOP : CLOSE-RUN, OPEN-STOP										
		Output signal			RPM : DC4~20mA (Isolated, Load Resistance : 500Ω below) Operation Setting : REMOTE, LOCAL, AUTO, MANU Dry Contact (1a) Operation Status : RUN, TRIP Dry Contact (RUN : 1a, TRIP : 1a1b										
		Control range of discharge volume			10~100% of Max. rpm										
		Display			RPM : 0~100.0%, Over Current : E.oC, Error of Analog Input Signal : E.or Short Circuit : E.SC, Error of Hall Sensor : E.HS, Over Heat : E.tE										
		Other functions			Ratio operation (Setting range : 0~100% against remote input signal), IP66										
	Motor	0.55kW, FR71									0.75kW, FR80		1.5kW, FR90		
		8 Poles BLDC (Max. rpm : 1,750 / Insulation Class : F), IP66													
Others		Self priming : 1m/Never use this pump to transfer liquid containing slurry or solids													
Painting		Munsell No. : 0.6PB 4.8/10.6													
Weight(kg)-STS type Standard		37			38		53		60		90	95	130		140

※ The above specifications and design could be changed for improvement without prior notice.

Patent Principle of adjustment for constant velocity Cam

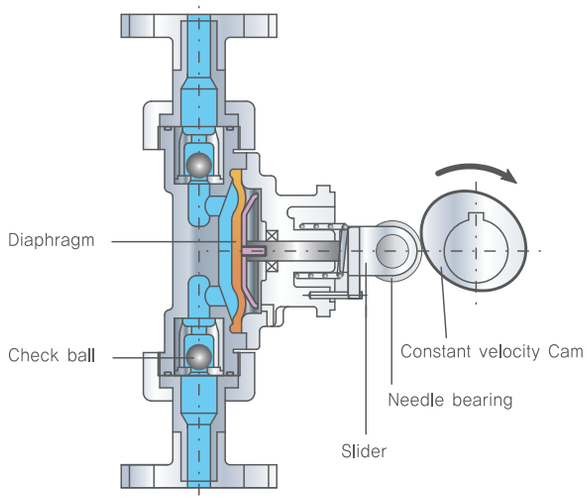

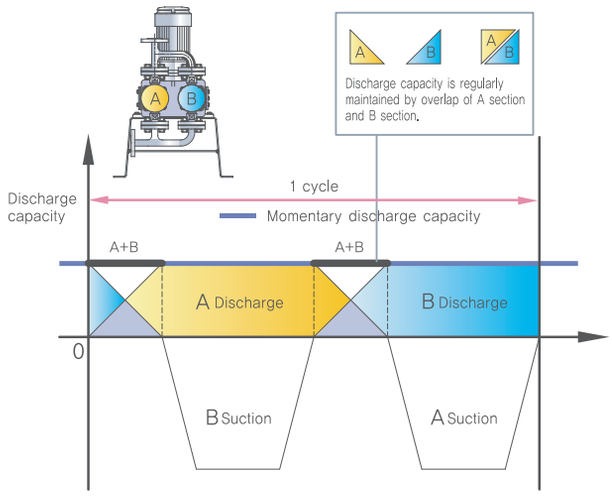

Standard Liquid End Material

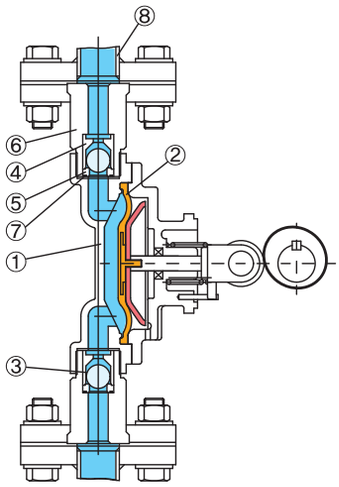

Material (Standard)		PTC		*FTC		STS		
Parts Name	Capacity	500~102	212~423	500~333	243~423	500~102	212~203	243~423
① Head		PP	PVC	PVDF	PTFE	SS304		
② Diaphragm		PTFE		PTFE		PTFE		
③ Check ball		CERAMIC		CERAMIC		SS304		
④ Ball guide		PP	PVC	PVDF		PVDF	SS304	
⑤ Ball seat		FKM	PVC	PTFE		PTFE	SS304	
⑥ Joint		PP	PVC	PVDF		SS304		
⑦ O-ring, Packing		FKM		PTFE		PTFE		
⑧ Confluent pipe		PVC		PVDF		SS304		

※ Material other than standard can be used for special purpose pumps.
Please contact us for special material ('*' is order made).

Dimensions

- PKD-500~102

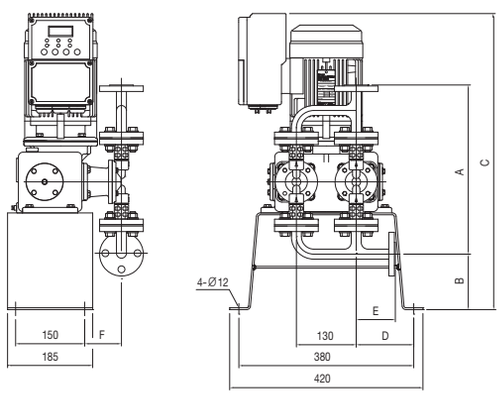

- PKD-212~423

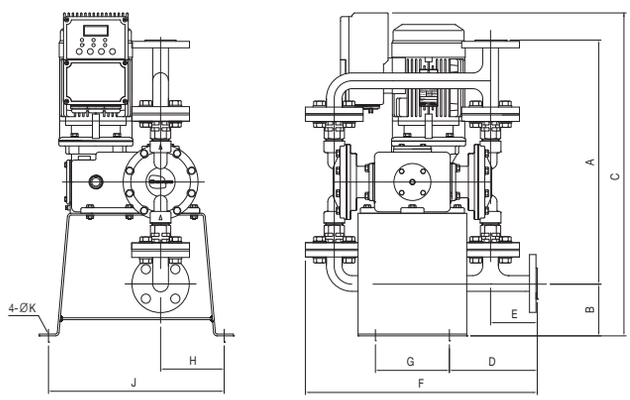

(Unit:mm)

Type (PKD)	A			B			C			D			E			F			G	H	J	K
	PTC	FTC	STS	PTC	FTC	STS	PTC	FTC	STS	PTC	FTC	STS	PTC	FTC	STS	PTC	FTC	STS				
-500	390	380	348	119	122	131	643			125			74	70	85	77		76	-	-	-	-
-121, 241	390	380		119	122																	
-521, 102	410	400	368	109	112	121										81		80				
-212, 412	516	500	422	112	118	151	698			155		190				448		453	160	138	380	12
-702, 143	625	596	524	70	80	116				193	185	215	99	90	101	510	503	502				
-113	625	596	524	129	139	174	754			230	229	234		90	101	625	623	645	200	178	465	
-203	637	614	567	123	130	152				234	233	241		90	101	632	630	645				
-243, 333	938	935	807	134	135	190	927			305	302	314	128	125	110	863		874	300	243	600	15
-423	944	937	854	131	134	166				338	335	343	128	125		869		878				

※ The above specifications and design could be changed for improvement without prior notice.

PKP

Plunger Type Continuous Flow Metering Pumps by using Constant Velocity Cam

Features & Applications

- Attaching BLDC Motor of high control ability
- Fine control in high pressure by using double check valve
- Increased confidence of discharge capacity by RPM Feed Back Control
- Proportion remote control by 4~20mA Input Signal
- No need for concern about motor damage at low speed operation
- Simplified electric equipments, possible to control the discharge rate to min. 10% operation of full scale
- AIR CHAMBER FREE!

Standard Liquid End Material

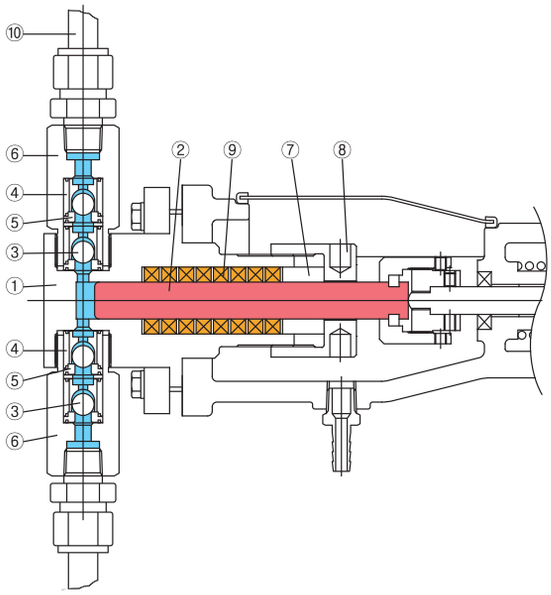

NO.	Parts Name	Material
①	Head	SS316
②	Plunger	SS316 + CQ
③	Check Ball	SS316
④	Ball Guide	SS316
⑤	Ball Seat	SS316
⑥	Joint	SS316
⑦	Gland Ring	SS316
⑧	Gland Nut	SS316
⑨	Gland Packing	PTFE + ARAMID
⑩	Confluent Pipe	SS316

Model Code

P K P – 12 1 L – S F – S – 1 2

Series name
PULSELESS
METERING PUMPS

Plunger

Plunger Diameter
6/12/16/22/30/40/50

Stroke Number
1: 58spm
2: 116spm
(In case of "M" driving box size, 1:87spm)

Driving Box Size
L: 0.4kW
M: 0.75kW

Liquid End Material
S: Standard (SS316)
X: Other

Connection Type
F: Flange
X: Special

Power Supply (BLDC)
S: 3Ø, 380~480V
A: 1Ø, 3Ø , 200~240V
X: Special

Remote control type of discharge capacity
0: Excluded
1: Inverter
2: BLDC M/C UNIT (AUTO)
3: BLDC M/C UNIT (MANU)

Confluent Pipe
0: Excluded
1: Included
2: Included+ Relief Valve

Standard Specifications

Specifications \ Model		PKP - Series																
		061L	062L	121L	122L	161L	162L	221L	222L	301L	302L	061M	121M	161M	221M	301M	401M	501M
Max. Capacity (mℓ/min)		26	52	110	220	200	410	390	800	700	1480	60	255	480	920	1660	3070	4835
Max. Discharge Pressure (bar)		160					100	104	52	56	28	200	225	160	123	68	38	24
Pulse Rate (%) F/S		±2.0																
Stroke Length (mm)		10										15						
Stroke Number (SPM)		58	116	58	116	58	116	58	116	58	116	87						
Max. Liquid Temp. (°C)		0~100°C, Ambient temperature : 0~40°C																
Connection	Thread	Rc1/4"				Rc3/8"				Rc1/2"		Rc1/4"		Rc3/8"		Rc1/2"		Rc3/4"
	Flange	KS63K15A						KS40K15A		KS20K15A		-		KS63K15A		KS40K 15A	KS20K 15A	KS20K 20A
Discharge Volume Controller (BLDC M/C UNIT)	Driver	Power Supply						200V class : 1Ø, 3Ø, 200~240V 400V class : 3Ø, 380~480V										
		Input signal (Auto)						RPM : DC4~20mA RUN/STOP : CLOSE-RUN, OPEN-STOP										
		Output signal						RPM : DC4~20mA (Isolated, Load Resistance : 500Ωbelow) Operation Setting : REMOTE, LOCAL, AUTO, MANU Dry Contact (1a) Operation Status : RUN, TRIP Dry Contact (RUN : 1a, TRIP : 1a1b)										
		Control range of discharge volume						5~100% of Max. rpm										
		Display						RPM : 0~100.0%, Over Current : E.oC, Error of Analog Input Signal : E.or Short Circuit : E.SC, Error of Hall Sensor : E.HS, Over Heat : E.tE										
		Other functions						Ratio operation (Setting range : 0~100% against remote input signal), IP66										
	Motor	0.55kW, FR71										0.75kW, FR80						
		8 Poles BLDC (Max. rpm : 1,750 / Insulation Class : F), IP66																
Others		Self priming : 1m, Never use this pump to transfer liquid containing slurry or solids																
		Above flange standard i s only for discharge side. Flange standard of suction side is KS 20K																
Painting		Munsell No. : 0.6PB 4.8/10.6																
Weight(kg)		54				56				60		93		95		99	105	107

※ The above specifications and design could be changed for improvement without prior notice.

Dimensions

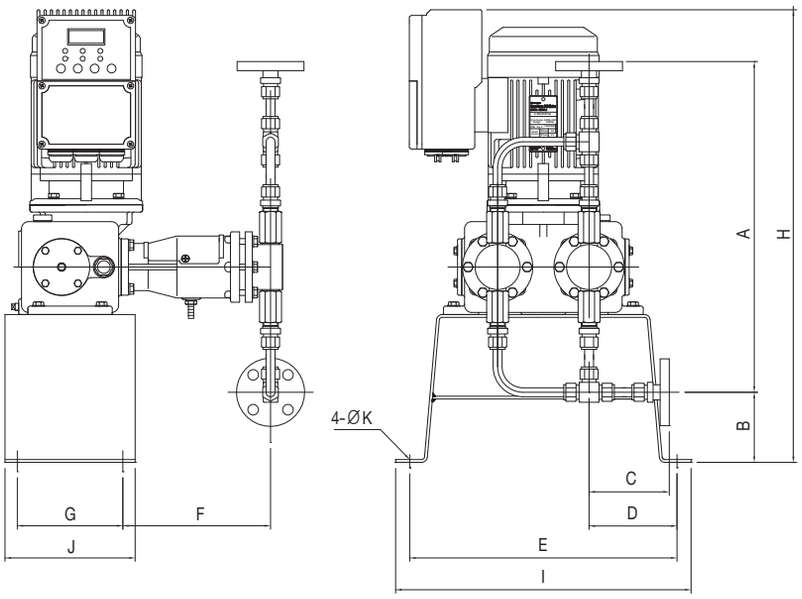

(Unit:mm)

Model (PKP)	A	B	C	D	E	F	G	H	I	J	K
061L	441	114	117	125	380	199	150	643	420	185	12
062L	441	114				199					
121L	441	114				202					
122L	441	114				202					
161L	465	102				209					
162L	465	102				209					
221L	471	99				210					
222L	471	99				210					
301L	509	80	115			206					
302L	509	80				206					
061M	441	261	117	177	555	234	170	802	590	300	12
121M	441	261				236					
161M	465	249				243					
221M	471	246				244					
301M	509	227				240					
401M	547	211	121			240					
501M	581	195				241					

Piping Diagram of KEMPION Smoothy Metering Pumps

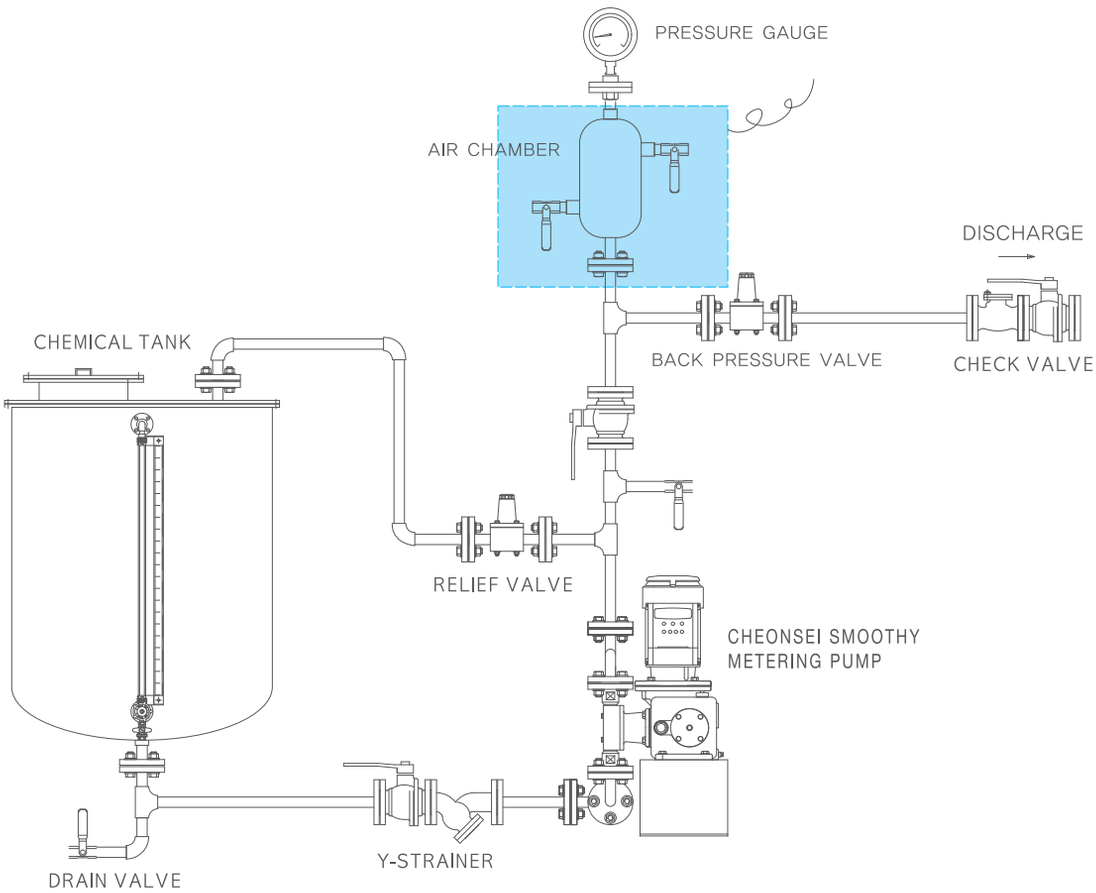

Possible to achieve production process with high quality

It is possible to found automatic process and defect rate can be lowered, owing to immediate discharge response when stop & start.

Cost and space can be reduced by simplified piping installation

It is economical because length of piping can be shortened and installation place can be easily secured by no need for Air Chamber.

No need for Air Chamber

Because it remove the origin of pulsation by operating method of constant velocity cam, Air Chamber is not necessary.

Easy maintenance

KEMPION Smoothy Metering Pumps using constant velocity cam provides convenience for maintenance. Because it does not need to fill up air for the function maintenance of Air Chamber.

- **Power generation plant :** Remover for desulfurization and denitrification, hydrazine injection process
- **Display materials :** Coating process of film membrane
- **Foods :** Metering injection of food flavoring
- **Paints :** Supplying paints for high pressure spray equipments
- **Medical products :** Proportional injection of raw material for manufacturing process of pharmaceutical product
- **Water treatment · Wastewater treatment :** Injection of Acid·Alkali counteragent

ISO9001 CE

KEMPION

Diaphragm Metering Pumps

KD

Reciprocating Type Metering Pumps by using Eccentric Cam

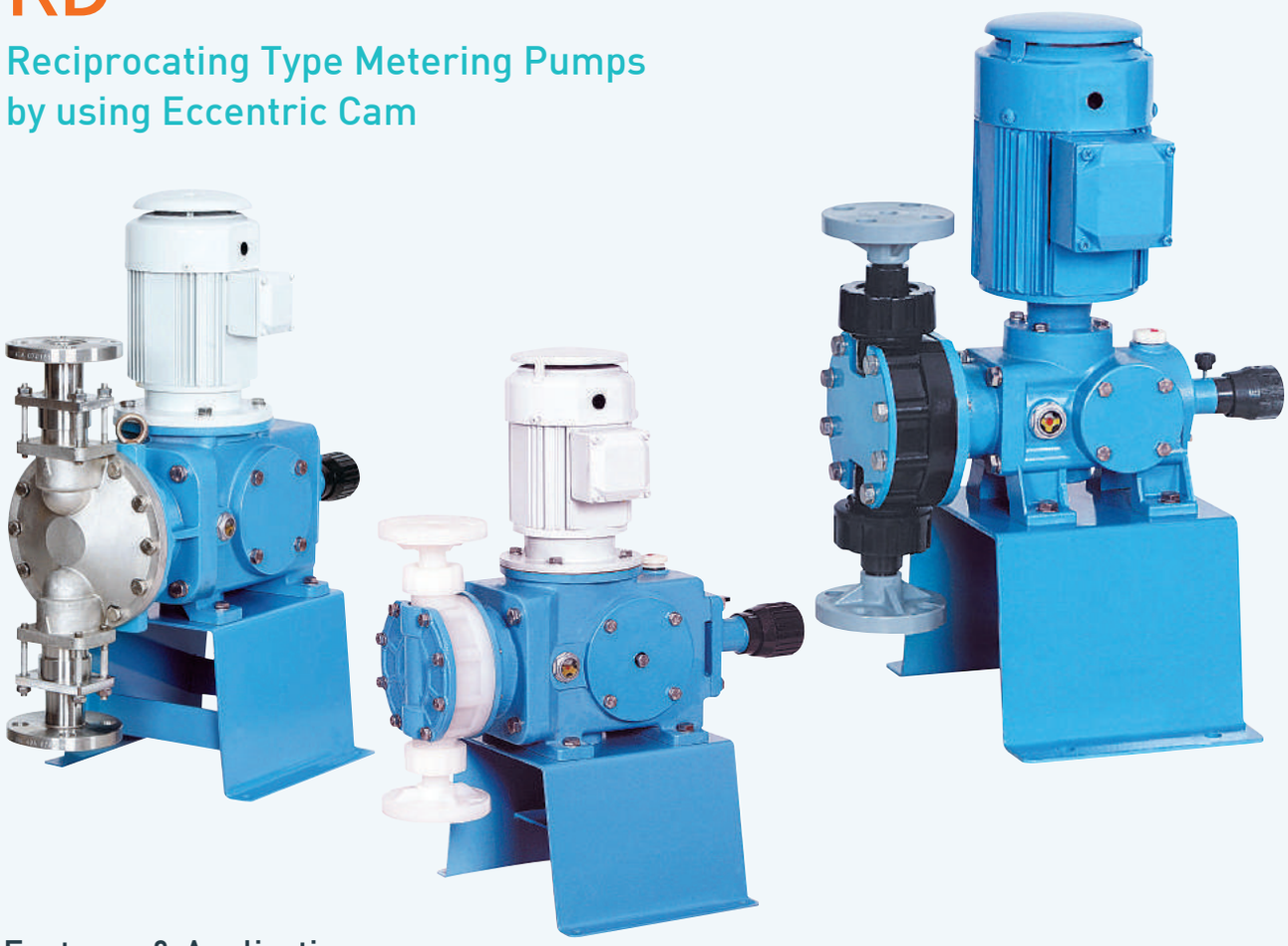

Features & Applications

- Can Quantitatively inject chemicals into pressurized container or pipe
- It has solved chemical corrosion and leakage problem by precise design and adopting chemical resistance materials
- Application for the various industry fields

Standard Specifications

Spec. / Model	Max. capacity (mL/min)		Max. discharge pressure (bar)	Stroke frequency (SPM)		Diameter of diaphragm (mm)	Stroke length (mm)	Connection			Motor (kW)	Weight (kg) Vert. (Hori.)
								Hose		Flange		
	50Hz	60Hz		50Hz	60Hz			PVC	PTFE			
KD-21H	20	25	10	48	58	30	3	Ø6×Ø11	Ø10×Ø12	KS10K 15A	0.2	14(17)
KD-61H	50	60	10	48	58	36	4					
KD-12H	100	120	10	96	116	36	4					
KD-22H	210	260	10	48	58	55	6	Ø12×Ø18				15(18)
KD-52H	420	520	10	96	116	55	6					
KD-82H	700	840	10	96	116	68	5					
KD-13H	850	1,020	10	48	58	100	6		Ø12×Ø14			17(20)
KD-23H	1,700	2,040	8	96	116	100	6					
KD-33L	2,900	3,480	5	48	58	130	10	-		KS10K 25A		19(22)
KD-43L	3,400	4,100	5	96	116	130	6					
KD-73L	6,200	7,440	3	96	116	130	10					
KD-53L	4,800	5,800	5	96	116	130	8				0.4	20(22)
KD-63L	5,450	6,550	4	96	116	130	9					
KD-33H	2,900	3,480	10	48	58	130	10	-		KS10K 25A	0.4	47(51)
KD-73H	6,200	7,440	7	96	116	130	10					
KD-43H	3,600	4,400	8	48	58	145	10	-		KS10K 25A	0.4	40(44)
KD-63H	5,500	6,600	7	48	58	145	15					
KD-93M	7,500	9,100	5	96	116	145	10					
KD-14N	9,800	11,800	4	96	116	145	12.5					
KD-14M	11,500	13,800	5	96	116	145	15				0.75	42(46)
KD-14H	9,000	10,800	7	48	58	177	17.5	-		KS10K 40A	0.75	86
KD-14G	13,300	16,000	5	96	116	177	12.5					86
KD-24L	18,400	22,000	3	96	116	177	17.5					86
KD-24S	23,300	28,000	3	96	116	195	17.5					89
KD-24H	18,400	22,000	7	96	116	177	17.5	-		KS10K 40A	1.5	88
KD-34H	26,600	32,000	5	96	116	195	20					92
KD-54L	45,000	54,000	3	96	116	250	20			KS10K 50A		100

Note) 1. Max.capacity is tested under the following conditions:
- Temperature : Ambient
- Liquid : Potable water
- Discharge pressure : Max. discharge pressure

2. The effective range of discharge volume adjustment is 20% up to 100% of max. capacity.
3. Special requirement of the motor (such as explosion proof) can only be met with horizontal type construction. (Except KDV-14H~54L).
4. The weight is based on standard motor & PTC type pump.
5. The limits of liquid temperature are 0~50°C for PVC and 0~80°C for Stainless Steel respectively.
6. Ambient temperature limit is 0~40°C.
7. Self-priming capacity is 1meter or less in full stroke operation.
8. The Munsell No. of painting is 0.6PB 4.8/10.6 except motor. (The color of the motor is manufacturer standard.)
9. The contents on this catalog may be revised for improvement without prior notice.

Model Code

KD V – ■ – 3 3 H – P T C – F W S

Construction
V:Vertical
H:Horizontal

Option
No Mark:No Option
A:BLDC M/C UNIT
B:SERVO UNIT
E:Air Relief Valve
F:Relief Valve

Norminal Capacity (example)
3 3 → 3 000 (mL/min)

Discharge Pressure Rank
H:High
M:Middle
L:Low
S:Special

Head Material
P:PP(PVC)
T:PVDF(PTFE)
S:SS304
6:SS316

Diaphragm Material
T:PTFE
E:EPDM

Check ball Material
C:Ceramic
S:SS304
6:SS316

Connection Type
F:Flange
H:Hose
For hose connection type, please consult with a Cheonsei representative.
X:Others

Power Supply
S:3Ø220/380 60Hz
3Ø440v 60Hz
X:Others

Viscosity Limit
W:Standard
V:High viscosity

Liquid End Material

- KD-21H~82H-PTC

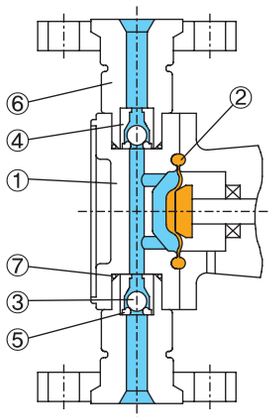

- KD-13H~14M-PTC

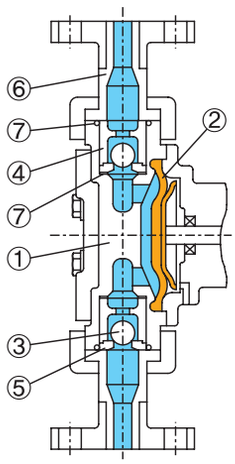

- KD-14H~54L-PTC

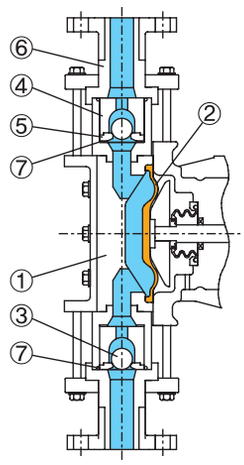

Material (Standard)		PTC (PES)		FTC		STS (6T6)	
Parts Name	Capacity	21H~82H	13H~54L	21H~14M	14H~54L	21H~82H	13H~54L
① Head		PP	PVC	PVDF	PTFE	SS304 (SS316)	
② Diaphragm		PTFE (EPDM)		PTFE		PTFE	
③ Check Ball		CERAMIC (STS304)		CERAMIC		STS304 (STS316)	
④ Ball Guide		PP	PVC	PVDF	PTFE (PVDF)	PVDF	STS304 (STS316)
⑤ Ball Seat		FKM (EPDM) PVC	PVC	PTFE (PVDF)		PTFE	STS304 (STS316)
⑥ Joint		PP	PVC	PVDF		STS304 (STS316)	
⑦ O-ring, Packing		FKM (EPDM)		PTFE		PTFE	

Note) 1. Materials other than standard can be used specially. If the customer request. Please contact to sales engineer or distributer.
2. All the information mentioned above may be revised for improvement without prior notice.

Accessories

Model Code

A C – V 15 A

Model
AC : Air Chamber
BV : Back pressure Valve
RV : Relief Valve

Body Materials
V : PVC
S : SS304
6 : SS316
F : PVDF

Flange Size
15 : KS10K 15A
20 : KS10K 20A
25 : KS10K 25A
40 : KS10K 40A
50 : KS10K 50A

Capacity
A : Standard
P : Special

Air Chamber

Reciprocating pump has a peculiar pulsation which results in vibration of piping and overfeed phenomena. Air chamber will be used to solve such problems caused by pulsation.

Model	Net Capacity (㎤)	Max. discharge pressure(bar)	
		PVC	STS
AC-□15A	500	10	10
AC-□20A	1,000	10	10
AC-□25A	2,000	10	10
AC-□40A	4,000	9	10
AC-□40P	6,000	6	10
AC-□50A	10,000	5	10

Back pressure Valve

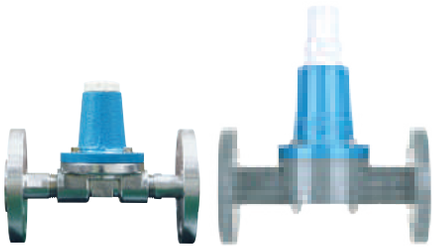

According to the conditions of the piping, the discharge rate may be excessive or the pumping liquid may be continuously leaked in spite of stopping the pump which is caused by overfeed or siphon phenomena. The back pressure valve is for preventing such things.

Model	Pressure Control Range (bar)	Standard Setting Pressure (bar)
BV-□15A	0.5~3	1
BV-□20A	0.5~3	1
BV-□25A	0.5~3	1
BV-□40A	0.5~3	1
BV-□40P	0.5~3	1
BV-□50A	0.5~3	1

Relief Valve

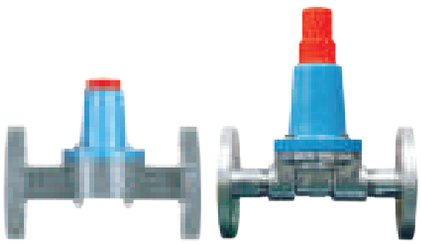

When the discharge pressure increases to more than a setting point due to choking the valve with debris or closing the valve, the safety valve will open automatically to relieve the pressure. Relief valve prevents pump and piping from damages.

Model	Pressure Control Range (bar)	Standard Setting Pressure (bar)
RV-□15A	3~10	5
RV-□20A	3~10	5
RV-□25A	3~10	5
RV-□40A	3~10	5
RV-□40P	3~8	5
RV-□50A	3~8	3

ISO9001 CE

KEMPION

Diaphragm Metering Pumps

KM

Medium Sized Diaphragm Metering Pumps

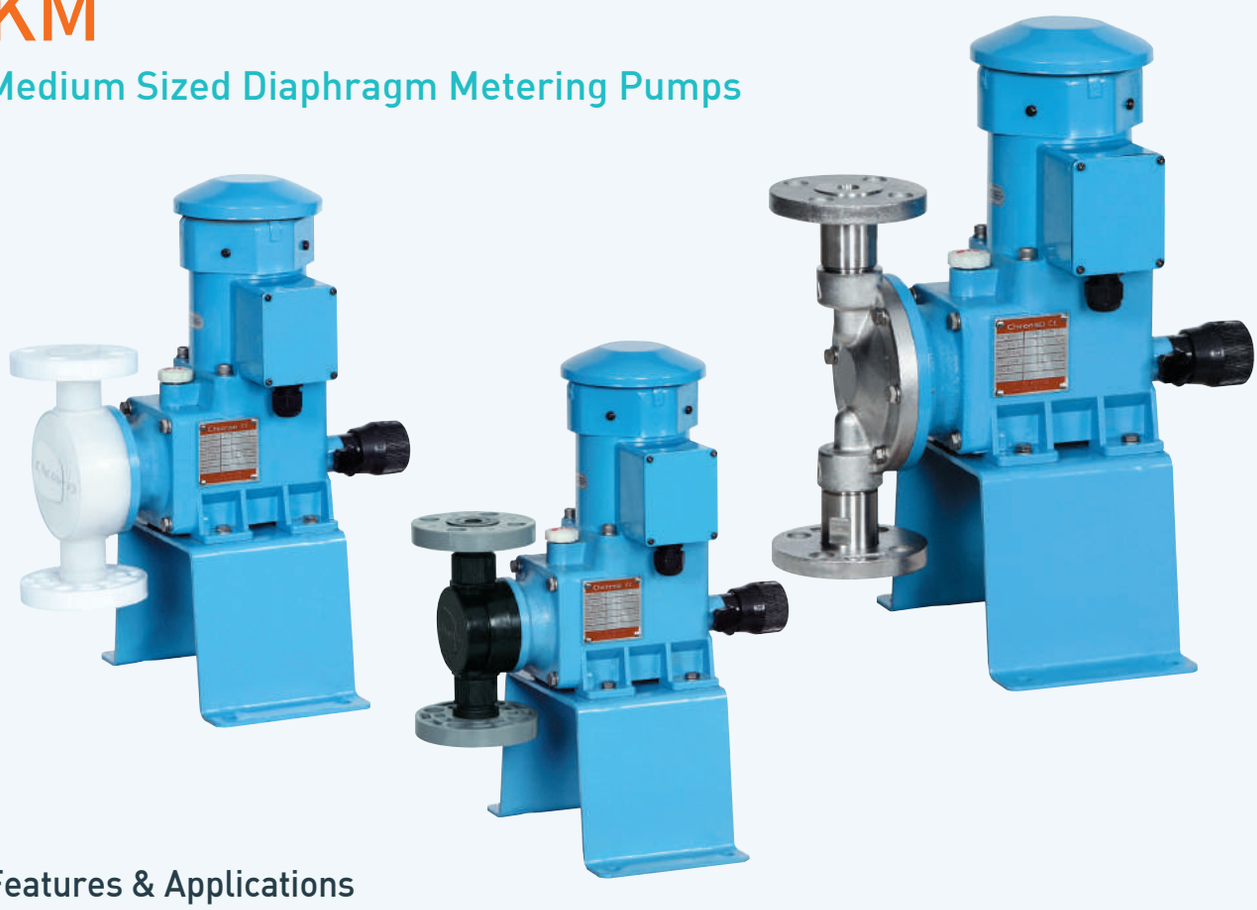

Features & Applications

- Economic and compact design.
- Various LEM (Liquid End Material) available to inject all kinds of chemical liquids.
- Efficiently durable and hermetic driving part structure for out-door installation.
- Excellent durability in a continuous running for long time, with a reduction gear by the way of oil bath lubricant.
- A small noise by the helical gear which made by a precised processing.
- The dial by the micrometer method, makes it possible to adjust the capacity precisely during operation.
- Hands free installation and maintenance.

Model Code

KM	—	☐	—	a	b	c	—	a	b	c	—			
				5	2	1		P	T	C		F	W	S

Series name
KM: KM Series (Diaphragm Type Medium Sized Metering Pumps)

Option
No mark: No Option
A: BLDC M/C UNIT
E: Air Relief Valve
F: Relief valvel

Nominal Capacity
$ab \times 10^{c}$
➡ 52×10^{1}
= 520(mL/min)(60Hz)

Option
a. Head
P: PP(PVC)
F: PVDF
S: SS304
6: SS316
X: Special
b. Diaphragm
T: PTFE
E: EPDM
X: Special
c. Check Ball
C: CERAMIC
6: SS316
X: Special

Connection Type
F: Flange
H: Hose
X: Special

Viscosity Limit
W: Standard (0~100cP)
V: High Viscosity (100~2,000cP)

Power Supply
S: 1Ø 220V
A: 3Ø 220/380V
B: 3Ø 440V 50/60Hz combined use

Specifications

Spec. / Model	Max. Capacity(mL/min)		Max. Discharge Pressure (bar)	Stroke Number(SPM)		Stroke length (mm)	Diameter of diaphragm (mm)	Connection		Flange	Motor	Weight (kg)
								Hose				
	50Hz	60Hz		50Hz	60Hz			PVC	PTFE			
KM-500	42	50	10	95	114	3	30	Ø6×Ø11	Ø10×Ø12	KS10K 15A	60W	8.6
KM-121	104	125	10	95	114	4	36					8.6
KM-251	213	255	10	95	114	5	45					8.6
KM-521	433	520	7	95	114	6	55	Ø12×Ø18				8.9
KM-102	854	1025	5	95	114	6	68					8.9
KM-212	1792	2150	3	95	114	7	90		-			9.9

※ 1. Max. capacity are tested under the condition as follows.
- Temperature : ambient - Liquid : Potable water - Discharge pressure : Max. discharge pressure.

2. The limits of liquid temperature are 0~50°C for PTC·FTC type and 0~80°C for ST6·6T6 type.
3. Self-priming capacity
- KM-500, 121 : 1 meter - KM-251~212 : 2 meter

4. Ambient temperature limit is 0~40°C.
5. The Munsell No. of painting is 0.6PB 4.8/10.6
6. The contents on this data may be revised for improvement without prior notice.

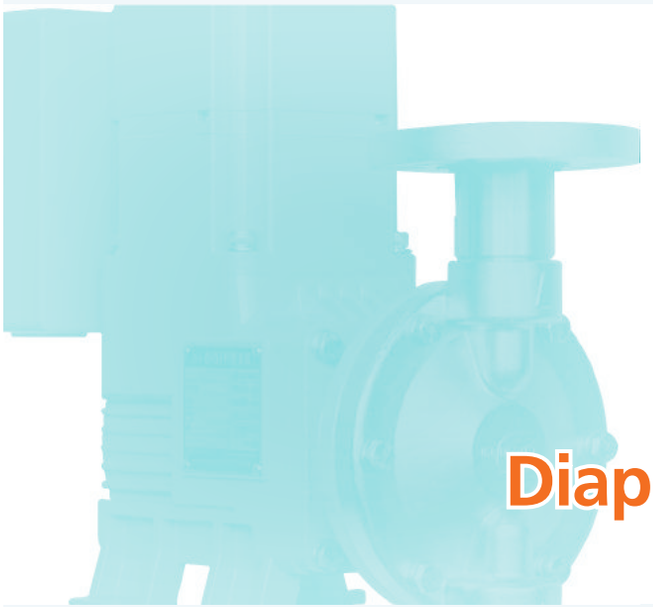

ISO9001 CE

KEMPION

Diaphragm Metering Pumps

KA

Automatic Control Metering Pumps

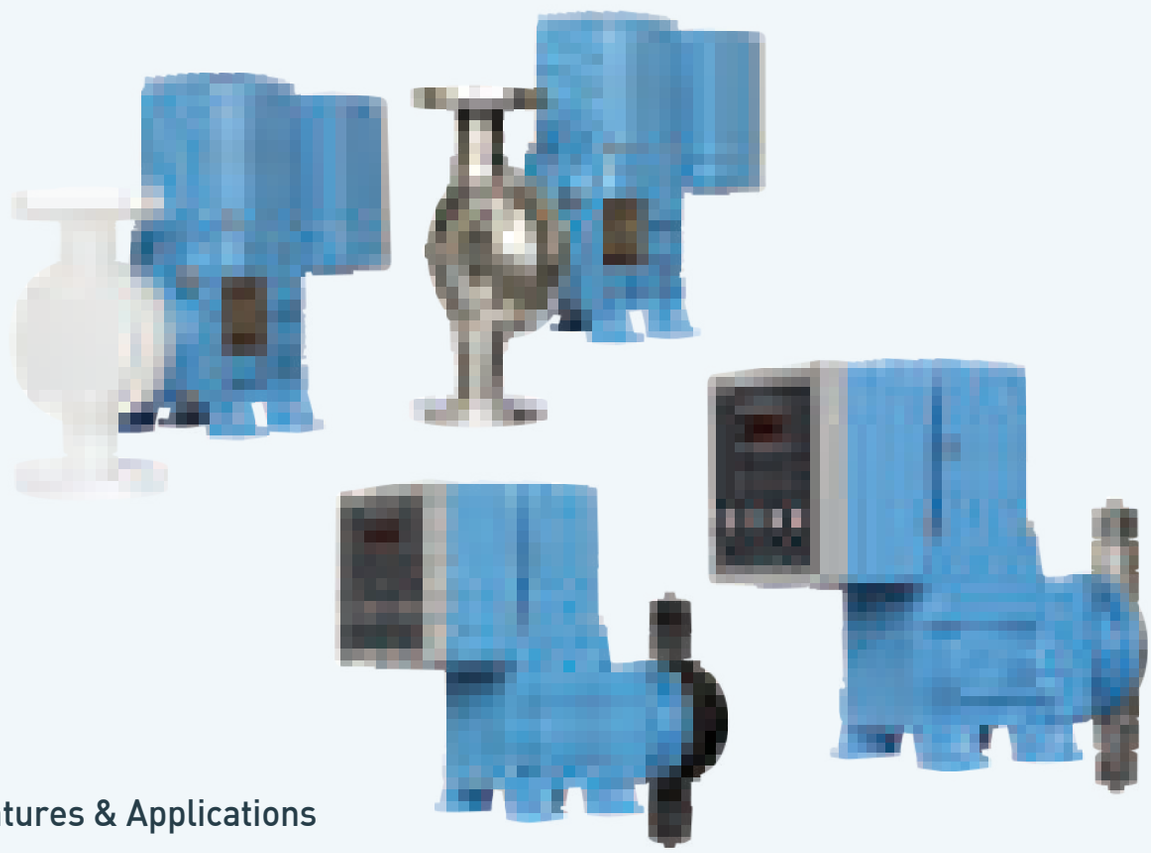

Features & Applications

- Attaching High Efficiency BLDC Motor.
- As Lightweight& Compact design, easy installation and maintenance.
- Various Liquid End Materials and connection types.
- As Simple structure of oil change free, easy operation.

Model Code

		a	b	c		a	b	c				
KA	—	5	2	1	—	P	T	C	—	F	W	S

Series name
KA: KA Series (Diaphragm Type Medium Sized Metering Pumps)

Nominal Capacity
$ab \times 10^{c}$
→ 52×10^{1}
= 520(mL/min)(60Hz)

Option
a. Head
P: PP(PVC)
F: PVDF
S: SS304
6: SS316
X: Special
b. Diaphragm
T: PTFE
E: EPDM
X: Special
c. Check Ball
C: CERAMIC
6: SS316
X: Special

Connection Type
F: Flange
H: Hose
X: Special

Viscosity Limit
W: Standard (0~100CP)
V: High Viscosity (100~2,000CP)

Power Supply
S: 1Ø AC200~240V 50/60Hz

Specifications

Spec. / Model	Max. Capacity (mL/min)	Max. Discharge Pressure (bar)	Stroke Number(SPM)	Stroke length (mm)	Diameter of diaphragm (mm)	Connection			Motor	Weight (kg)
						Hose		Flange		
						PVC	PTFE			
KA-521	520	10	116	6	55	Ø12×Ø18	Ø10×Ø12	KS10K 15A	120W	9.5
KA-102	1025	7	116	6	68					9.5
KA-212	2150	5	116	7	90		Ø12×Ø14			10.5

※ 1. Max. capacity is tested under the standard status (room temperature, clean water) and Max.discharge pressure.
2. Effective control range of flow rate is 10~100%.
3. PVC hose is only applicable for PTC&PE6 Liquid End Type, and PTFE hose is only applicable for FTC, ST6&6T6 Liquid End Type.
4. The limits of liquid temperature are 0~50°C for PTC&FTC Liquid End Type and 0~80°C for STS&6T6 Liquid End Type.
5. Ambient temperature limit is 0~40°C.
6. Self-priming capacity: 2 meters.
7. The Munsell No. of painting is 0.6PB 4.8/10.6
8. Specifications can be changed for improvement with out notice.

ISO9001 CE

KEMPION

Small Diaphragm Metering Pumps

KS

Motor Driven Small Diaphragm Metering Pumps

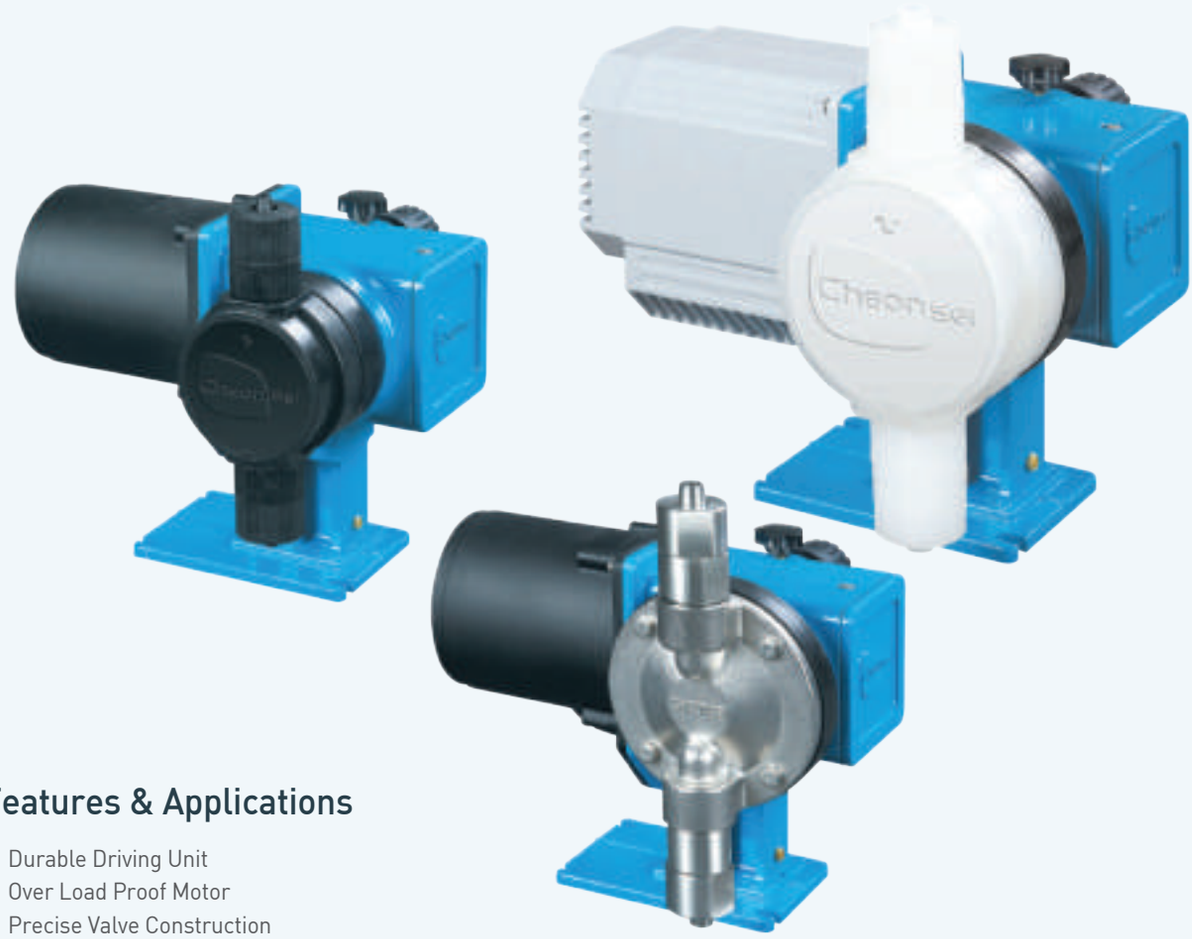

Features & Applications

- Durable Driving Unit
- Over Load Proof Motor
- Precise Valve Construction
- Gas Locking Prevention
- Easy Dial Setting
- Accessories Available

Model Code

		a	b		a	b	c		a	b	c			
KS	—	1	2	—	P	F	C	—	H	W	S	—	S	

Series name

KS : KS Series (Small diaphragm type metering pump)

Nominal Capacity

1 2 = 100 mL/min (60Hz)

1 is the figure on the left and

2 is the number of zeros following.

Liquid End Material

a. Pump head
- P: PP
- F: PVDF
- S: SS304
- 6: SS316
- X: Special

b. Ball seat
- F: FKM
- E: EPDM
- T: PTFE

c. Check ball
- C: CERAMIC
- 6: SS316
- X: Special

※ Please note that the combination of liquid-end materials is not unlimited. Refer to the standard liquid-end parts material list table for each model.

※ The diaphragm material is PTFE for all models.

Specification

a. Joint type
- H: Hose
- X: Special

b. Valve structure
- W: Standard (below 50cp:Water-like)
- V: High Viscosity (50~1000cp)

c. Others
- S: standard
- A: Air relief valve
- B: Boiler
- C: A+B type
- F: Relief Valve
- G: F+B type
- X: Special

※ Please note that the combination is not unlimited. Refer to the standard specifications list table for each model.

Power Supply

S: 200~300V
B: 240V 50/60Hz
C: 100V 50/60Hz
X: Special
※1 Phase only

Standard Specifications

Specs. \ Model		KS-51	KS-12	KS-22	KS-32	KS-52
Max. capacity (mL/min)	50Hz	40	80	200	300	480
	60Hz	50	100	240	360	580
Max. discharge pressure (bar)		15	10	7	5	3
Stroke number (SPM)	50Hz	108				
	60Hz	130				
Stroke length (mm)		3		4	6	
PVC hose	HWS	Ø 6x Ø 11				Ø12xØ18
PTFE hose	HWS	Ø10xØ12				
PVC hose for high viscosity	HVS	Ø12xØ18				
PVC hose for air relief valve	HWS	Ø 4x Ø 6				-
PTFE hose for air relief valve	HWS	Ø 4x Ø 6				-
Operation temperature		Ambient temperature 0~40°C				
		Pumping temperature 0~50°C				
Output (W)		14				
Weight (kg)	P□□ type	2.4				2.7
	F□□ type	2.6				2.8
	S□□, 6□□ type	3.1				3.5

Note) 1. The listed max. capacity is that at max. discharge pressure
2. The standard valve structure can only allow the maximum possible viscosities for discharge up to maximum of 50cp
3. The motor is not explosion proof, please consider the purpose of use fully before choosing
4. This pump is designed for indoor use. Be sure to use a pump cover if installing out door
5. Never use this pump to transfer liquids containing slurry (In such a case please consult CHEONSEI)
6. For any other specifications, please consult CHEONSEI

Standard Liquid and Materials

Type \ Parts	Head	Diaphragm	Check ball	Ball seat	Ball guide	Joint	O-ring	Hose
PFC	PP	PTFE	CERAMIC	FKM	PP	PP	FKM	PVC
PEC	PP	PTFE	CERAMIC	EPDM	PP	PP	EPDM	PVC
FTC	PVDF	PTFE	CERAMIC	PTFE	PVDF	PVDF	PTFE	PTFE
ST6	SS304	PTFE	SS316	PTFE	PVDF	SS304	PTFE	PTFE
6T6	SS316	PTFE	SS316	PTFE	PVDF	SS316	PTFE	PTFE

Strainer Foot Valve

Type \ Parts	Main body	Joint	Check ball	Ball seat	Ball guide	Net	O-ring
PFC	PP	PP	CERAMIC	FKM	PP	PP	FKM
PEC	PP	PP	CERAMIC	EPDM	PP	PP	EPDM
FTC, ST6, 6T6	PVDF	PVDF	CERAMIC	PTFE	PVDF	ETFE	PTFE

Anti-Siphon Check Valve

Type \ Parts	Main body	Joint	Siphon head	Siphon seat	Spring	O-ring
PFC	PP	PP	FKM	PP	HASTELLOY C-276	FKM
PEC	PP	PP	EPDM	PP		EPDM
FTC, ST6, 6T6	PVDF	PVDF	CERAMIC (Check Ball)	PTFE		-
Boiler	PPS	PP	EPDM	PPS		EPDM

Various Accessories

There are additional high performance accessories available convenient applications.
- Anti-siphon Check Valves
- Strainer Foot Valve
- Flange Connections, Tees, Elbows

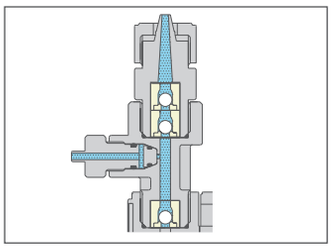

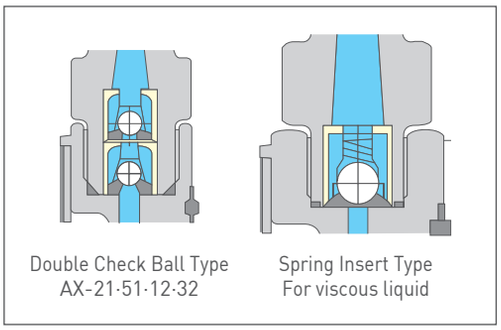

Double Check Ball Type
AX-21·51·12·32

Spring Insert Type
For viscous liquid

Precise Valve Structure

The degree of precision is maximized since Double check balls or spring insert type is adopted in valve structure

Gas Locking Prevention

- Liquid End Design minimizes dead space.
- Air Relief Valve can be provided for vaporous liquid. (Optional item for KS-51~32)

Performance Curves

60Hz 50Hz

Conditions : Room Temperature, Clean water, Suction Head - 1m

● KS-51

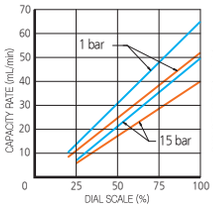

● KS-12

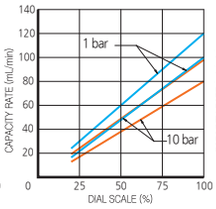

● KS-22

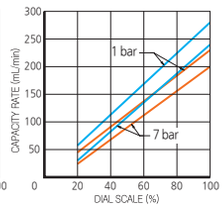

● KS-32

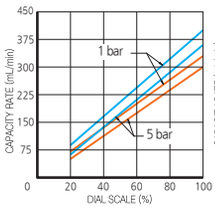

● KS-52

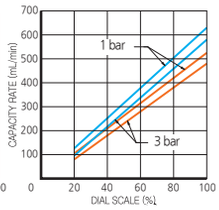

※ Performance curves can be somewhat different in accordance with application of job site.

Overall Dimensions

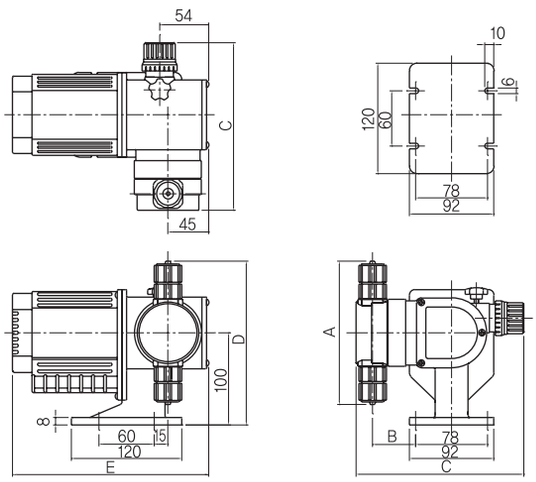

(Unit:mm)

Size / Model	A	B	C	D	E
KS-51	156	48	183.5	178	214
KS-12	156	48	183.5	178	214
KS-22	156	48	184	178	214
KS-32	156	48	186.5	178	214
KS-52	198	52.5	192	199	217

※ Above dimensions show P□□ type.

Accessories List

Hose	3m
Strainer Foot Valve	1 pc
Anti-Siphon Check Valve	1 pc
Mounting Bolts(With nut M5×0.8×20)	4 sets
Hexagonal L-Wrench(M5 Subtense 2.5)	1 pc
Instruction Manual	1 copy

※ For KS-51 model only, air relief valve is provided for free as a standard accessory.

※ The strainer foot valve and anti-siphon check valve are not provided on the high viscosity type.

PVC Hose Temperature-Pressure Curve

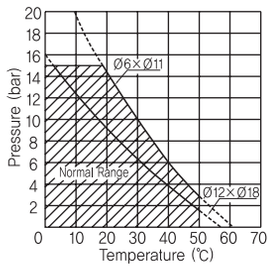

※ Thermo-proof hose for high temperature is available upon request

When Placing Order

In order to provide the most suitable pump, please provide the following information.

(1) Specification of Liquid
- Liquid name
- Ingredients
- Concentration(%)
- Temperature(℃)
- Viscosity(cp)
- Specificgravity

(2) Conditions of Installation
- Purpose of use
- Required capacity(mℓ/min)
- Required Pressure(bar)
- Suction side piping
- Dischargeside piping
- Power source
- Ambient temperature(℃)
- Installation location
- Mounting method
- Operating time

(3) Others
- Desired Delivery date and place
- Any other requirement

※ Material other than standard can be used for special purpose pump. Please contact us or distributor in your area.

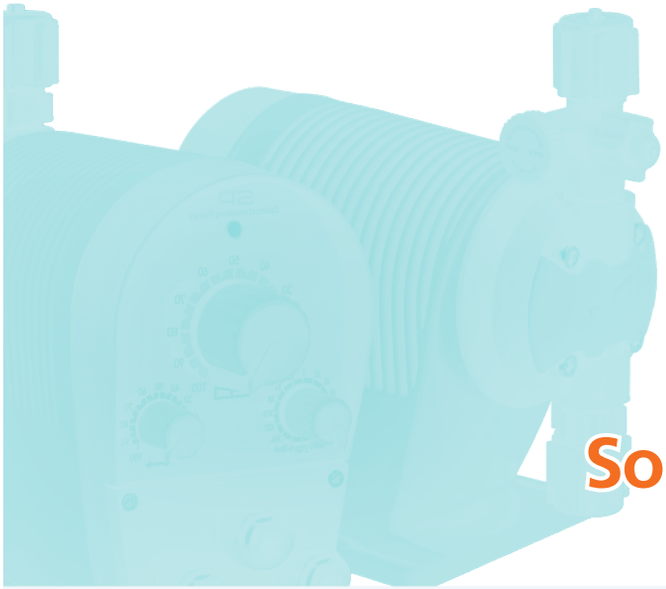

ISO9001 CE GOOD DESIGN

KEMPION

Solenoid Metering Pumps

SP-A

Automatic or Advanced

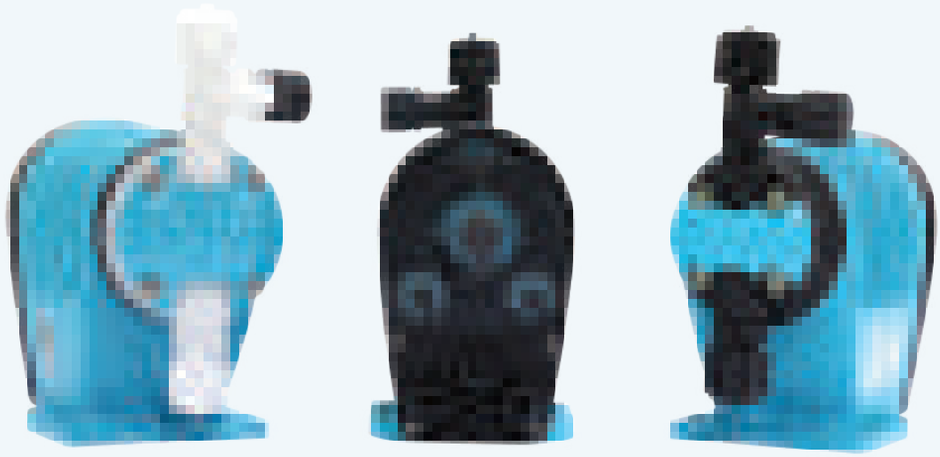

Features & Applications

- Precise injection and flow control by the dual control of Stroke Length & Stroke Numbers
- The operation status can be checked with Status Lamp (LED)
- Sealing and Accuracy are improved by double check Valve
- Can cope with difficult environments by robust IP65 class and casing material of chemical resistance
- Various auto-control function (Option)
  - Ratio Control by input signal of PULSE
  - Multiplication & Division input signal of PULSE
  - Ratio Control by input signal of 4~20mA
  - Alarm for Low Level & Signal Error
  - Remote Run & Stop
- Easy & Safe Air Vent Valve
- Prevent damage from overload by built-in Thermal Protection
- Used for injection of Boiler Chemical, Chlorine Disinfectants, & Food Additives, and used for dosing chemicals in various industrial fields including physico-chemical fields, semiconductor device, water treatment, wast water treatment fields, & etc.

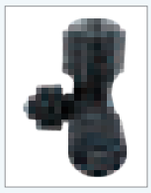

- Relief Valve (Option)
  When over pressure, valve is automatically opened and pump & piping can be protected. Function of Air Vent Valve is included.

- Prevent Gas Lock Phenomenon
  Support priming

Model Code

SP – A 20 – P F C – 1 W S – 1 1 0

a b c

Series name
SP Series

Control Panel Type
A : Automatic or Advanced

Nominal Capacity
20 : 20mL/min

Liquid End Material
a. Pump Head
P: PP
F: PVDF
b. Ball Seat
F: FKM
E: EPDM
V: FKM (ETP)
T: PTFE
c. Check Ball
C: CERAMIC
S: SS316

Valve Structure
W: Standard (0~100mPa·s)
V: High Viscosity (100~1000mPa·s)
※ In case of the valve for high viscosity, spring is installed in the valve.

General Specification
S: Standard
B: Boiler
F: Relief Valve
G: B + F
※ In case of Boiler type, discharge hose is nylon and the body of Anti-siphon Check Valve is PPS.

Hose Standard
1: Ø4×Ø6
2: Ø4×Ø9 (Braided PVC)
3: Ø6×Ø8
4: Ø6×Ø11 (Braided PVC)
5: Ø5×Ø8

Power supply
1: AC220 (198~242V)
2: AC240V (216~264V)
※ Common data : 1 Phase 50/60Hz

Control Specification
1: Manual
2: Manual+Add. Func.
3: Pulse (1:1)
4: Pulse (1:1)+Add. Func.
5: 4~20mA
6: 4~20mA+Add. Func.
7: Pulse (DIV/MUL) +4~20mA+Add. Func.
※ Additional Function is Input of Level Switch, Output of Alarm

Power Cord
0: 2m of power cord without Plug
1: 2m of power cord & Plug

Specifications

Spec. \ Model		SP-A20	SP-A40	SP-A60	SP-A100	SP-A200
Max. Capacity (mL/min)		17	35	60	110	200
Max. Discharge Pressure (bar)		16	12	8	5	3
Stroke Rate (SPM)		150				
Stroke Length (mm)		1.0 (40~100%)		1.25 (30~100%)		
Hose	Suction · Discharge	Ø4×Ø6, Ø4×Ø9		Ø6×Ø8, Ø6×Ø11, Ø5×Ø8		
	Air Vent	Ø4×Ø6				
Self-priming (m)		1.5	2			
Viscosity Limit (mPa·s)	Standard	50		100		
	High Viscosity	500		1000	800	500
Weight (kg)	PP Material	2.4			2.5	
	PVDF Material	2.5			2.6	
Operation Temperature		Ambient Temperature 0~40℃ Liquid Temperature 0~50℃				
Electrical Data		Average Power Consumption (W)	Rated Current (A)	Protection Class	Insulation Class	
		17	0.5	IP65	F	

Note) 1. Repeatability is ±2%F.S.(Full Scale) and noise is within 70dB.
2. Setting pressure of Relief Valve is ±10% of max. discharge pressure.
3. Specifications can be changed for improvement without prior notice.

SP-B

Basic & Manual

Model Code

SP – B 30 – P F C – 1 W S – 1 1 0

Series name
SP Series

Control Panel Type
B: Basic & Manual

Nominal Capacity
30: 30mL/min
(In case of 30H, 'H' means High Pressure Type)

Liquid End Material (a, b, c)
a. Pump Head
P: PP
F: PVDF
b. Ball Seat
F: FKM
E: EPDM
V: FKM (ETP)
T: PTFE
c. Check Ball
C: CERAMIC
S: SS316

Valve Structure
W: Standard
(0~70mPa s)
V: High Viscosity
(70~700mPa·s)
※ In case of the valve for high viscosity, spring is installed in the valve.

Hose Standard
1: Ø4×Ø6
2: Ø4×Ø9 (Braided PVC)
3: Ø6×Ø8
4: Ø6×Ø11 (Braided PVC)
5: Ø5×Ø8

General Specification
S: Standard
B: Boiler
F: Relief Valve
G: B + F
※ In case of Boiler type, discharge hose is nylon and the body of Anti-siphon Check Valve is PPS.
※ In case of SP-200, Relief Valve can not be used.

Control Specification
1: Manual

Power supply
1: AC220V
(198~242V)
2: AC240V
(216~264V)
3. AC115V
(104~127V)
※ Common data
: 1 Phase 50/60Hz

Power Cord
0: 2m of power cord without Plug
1: 2m of power cord & Plug

Specifications (I)

Spec. \ Model		SP-B30	SP-B50	SP-B70	SP-B100	SP-B200
Max. Capacity (mL/min)		25	55	70	135	240
Max. Discharge Pressure (bar)		14	8	6	3.5	2
Stroke Rate (SPM)		240				
Stroke Length (mm)		1.0 (40~100%)				
Hose	Suction · Discharge	Ø4×Ø6, Ø4×Ø9		Ø6×Ø8, Ø6×Ø11, Ø5×Ø8		
	Air Vent	Ø4×Ø6				
Self-priming (m)		1	1.5			2
Viscosity Limit (mPa · s)	Standard	50		70		
	High Viscosity	300		700	600	400
Weight (kg)	PP Material	1.9			2	
	PVDF Material	2			2.1	
Operation Temperature		Ambient Temperature 0~40℃ Liquid Temperature 0~50℃				
Electrical Data		Average Power Consumption (W)	Rated Current (A)	Protection Class	Insulation Class	
		15	0.4/0.7 (115V)	IP65	F	

Note) 1. Repeatability is ±2%F.S.(Full Scale) and noise is within 70dB.
2. Setting pressure of Relief Valve is ±10% of max. discharge pressure.
3. Specifications can be changed for improvement without prior notice.

Specifications (II)

Spec. \ Model		SP-B30H	SP-B50H	SP-B70H	SP-B100H
Max. Capacity (mL/min)		30	55	75	130
Max. Discharge Pressure (bar)		16	12	8	5
Stroke Rate (SPM)		240			
Stroke Length (mm)		1.0 (40~100%)			
Hose	Suction · Discharge	Ø4×Ø6, Ø4×Ø9		Ø6×Ø8, Ø6×Ø11, Ø5×Ø8	
	Air Vent	Ø4×Ø6			
Self-priming (m)		1	1.5		
Viscosity Limit (mPa · s)	Standard	50		70	
	High Viscosity	300		700	600
Weight (kg)	PP Material	2.4			2.5
	PVDF Material	2.5			2.6
Operation Temperature		Ambient Temperature 0~40℃ Liquid Temperature 0~50℃			
Electrical Data		Average Power Consumption (W)	Rated Current (A)	Protection Class	Insulation Class
		17	0.5 / 0.8 (115V)	IP65	F

SP-C

Common Display

Model Code

SP – C 30 – P F C – 1 W S – 1 1 0

Series name
SP Series

Control Panel Type
C: Common Display

Nominal Capacity
30 : 30mL/min

Liquid End Material (a, b, c)
a. Pump Head
P: PP
F: PVDF
b. Ball Seat
F: FKM
E: EPDM
V: FKM (ETP)
T: PTFE
c. Check Ball
C: CERAMIC
S: SS316

Hose Standard
1: Ø4×Ø6
2: Ø4×Ø9 (Braided PVC)
3: Ø6×Ø8
4: Ø6×Ø11 (Braided PVC)
5: Ø5×Ø8

Valve Structure
W: Standard (0~70mPa·s)
V: High Viscosity (70~700mPa·s)
※ In case of the valve for high viscosity, spring is installed in the valve.

General Specification
S: Standard
B: Boiler
F: Relief Valve
G: B + F
※ In case of Boiler type, discharge hose is nylon and the body of Anti-siphon Check Valve is PPS.
※ Relief Valve is not applied to SP-C200.

Power supply
1: AC220V (198~242V)
2: AC240V (216~264V)

Control Specification
1: Manual
3: PULSE (or 4~20mA) + Add. Func.(1)
4: PULSE (or 4~20mA) + Add. Func.(2)
※ Add. Func.(1) : Input of Level Switch (or remote START/STOP)
※ Add. Func.(2) : Input of Level Switch, Remote START/STOP, & Output of Alarm

Power Cord
0: 2m of power cord without Plug
1: 2m of power cord & Plug (Korean standard)

Specifications

Spec. \ Model		SP-C30	SP-C50	SP-C70	SP-C100	SP-C200
Max. Capacity (mL/min)		25	55	75	140	200
Max. Discharge Pressure (bar)		16	12	9	5.5	3
Stroke Rate (SPM)		1~240				
Hose	Suction·Discharge	Ø4×Ø6, Ø4×Ø9		Ø6×Ø8, Ø6×Ø11, Ø5×Ø8		
	Air Vent	Ø4×Ø6				
Self-priming (m)		1	1.5			2
Viscosity Limit (mPa·s)	Standard	50		70		
	High Viscosity	300		700	600	400
Weight (kg)	PP Material	2	2.4			
	PVDF Material	2.1	2.4		2.5	
Operation Temperature		Ambient Temperature 0~40℃ Liquid Temperature 0~50℃				
Electrical Data	Average Power Consumption(W)	15W	17W			
	Rated Current(A)	0.4	0.5			
	Protection & Insulation Class	IP65 F				

Note) 1. Repeatability is within ±2%FS and noise is within 70dB.
2. Setting pressure of Relief Valve is ±10% of max. discharge pressure.
3. Specifications can be changed for improvement without prior notice.

SP-D

Deluxe Display

Model Code

Hose Standard
1: Ø4×Ø6 (PTEF)
2: Ø4×Ø9 (Braided PVC)
3: Ø6×Ø8 (PE, PTEF)
4: Ø6×Ø11 ((Braided PVC)
6: Ø8×Ø12 (Braided PVC)
7: Ø8×Ø10 (PTEF)
8: Ø9×Ø12 (PE)
9: Ø10×Ø12 (PTEF)
A: Ø12×Ø18 (Braided PVC)

Power Cord
0: 2m of power cord without Plug
1: 2m of power cord with Plug

Nominal Capacity
500: 500mL/min
(In case of 500H, "H" means High Pressure type)

Power supply
1: AC220V (198~242V)
2: AC240V (216~264V)
※ Common data : 1 Phase 50/60Hz

a b c

SP – D 500 – P F C – 8 W S – 3 1 0

Control Panel Type
D: Deluxe Display

Series name
SP Series

Liquid End Material
a. Pump Head
P: PP
F: PVDF
b. Ball Seat
F: FKM
E: EPDM
T: PTFE
c. Check Ball
C: CERAMIC
S: STS316

Valve Structure
W: Standard
V: High Viscosity
※ In case of valve for high viscosity, spring is installed in the valve.

General Specification
S: Standard
B: Boiler
F: Relief Valve
G: Boiler + Relief Valve
※ In case of Boiler type, discharge hose is nylon and the body of Anti-siphon Check Valve is PPS.
※ Relief Valve is applied only to SP-D50, D100, D200.

Control Specification
3: PULSE (or 4~20mA) + Add. Func.(1)
4: PULSE (or 4~20mA) + Add. Func.(2)
※ Add. Func.(1) : Input of Level Switch (or remote START/STOP)
※ Add. Func.(2) : Input of Level Switch, Remote START/STOP, & Output of Alarm

Specifications

Spec. \ Model		SP-D50	SP-D100	SP-D200	SP-D300	SP-D500
Max. Capacity (mL/min)		50	105	200	370	580
Max. Discharge Pressure (bar)		20	10	6	3	2
Stroke Rate (SPM)		1~240				
Stroke Length (mm)		1.0 (40~100%)	1.5 (20~100%)			
Hose	Suction · Discharge	Ø4×Ø6, Ø4×Ø9	Ø6×Ø8, Ø6×Ø11		Ø8×Ø12, Ø8×Ø10, Ø9×Ø12	
	Air Vent	Ø4×Ø6			-	
Weight (kg)	PP Material	3.9				4.0
	PVDF Material	4.0				4.1
Operation Temperature		Ambient Temperature 0~40℃ Liquid Temperature 0~50℃				
Electrical Data		Average Power Consumption (W)	Rated Current (A)	Protection Class	Insulation Class	
		30	0.6	IP65	F	

Spec. \ Model		SP-D300H	SP-D500H	SP-D700	SP-D1000
Max. Capacity (mL/min)		290	500	780	1100
Max. Discharge Pressure (bar)		10	7	4	2.5
Stroke Rate (SPM)		1~240			
Stroke Length (mm)		1.5 (20~100%)			
Hose	Suction · Discharge	Ø8×Ø10, Ø8×Ø12, Ø9×Ø12,		Ø10×Ø12, Ø12×Ø18	
Weight (kg)	PP Material	9.0	9.1	9.2	
	PVDF Material	9.1	9.2	9.4	
Operation Temperature		Ambient Temperature 0~40℃ Liquid Temperature 0~50℃			
Electrical Data		Average Power Consumption (W)	Rated Current (A)	Protection Class	Insulation Class
		70	1.0	IP65	F

Note) 1. Prepeatability is ±2%F.S.(Full Scale) and noise is below 75dB.
2. Setting pressure of Relief Valve is ±10% of max. discharge pressure.
3. Specifications can be changed for improvement without prior notice.

ISO9001

KEMPION

Hydraulic Bypass Metering Pumps

BKH

Design and manufacture according to API 675 standard

Features & Applications

- High durability and high safety by Crank driving type
- Sensing the damage of diaphragm and generating the Alarm signal
- Application for whole industries including petrochemistry, processing line, & etc.
- Proportion remote control by BLDC M/C UNIT and SERVO-UNIT

Model Code

BKH	–	☐	–	10 (a)	1 (b)	A (c)	–	S (a)	S (b)	–	☐	–	F	S

Series name
BKH
(Hydraulic Bypass Metering Pumps)

Control Option
No mark: Manual
A: BLDC M/C UNIT
B: SERVO UNIT

Type
a. Plunger (10, 15, 22, 32, 42, 55, 70)
b. Gear ratio (1, 2, 3, 4)
c. Driving box size (A, B, C, D)

Liquid End Material
a. Head
P: PVC
F: PVDF
S: SS316
X: Special
b. Check Ball
C: CERAMIC
S: SS316
X: Special

Liquid End Option
No mark: None
1: Diaphragm damage detection device

Connection
F: Flange
T: Thread
X: Special

Power supply
S: 3ø 220/380V
A: 3ø 440V
X: Special

Liquid End Material

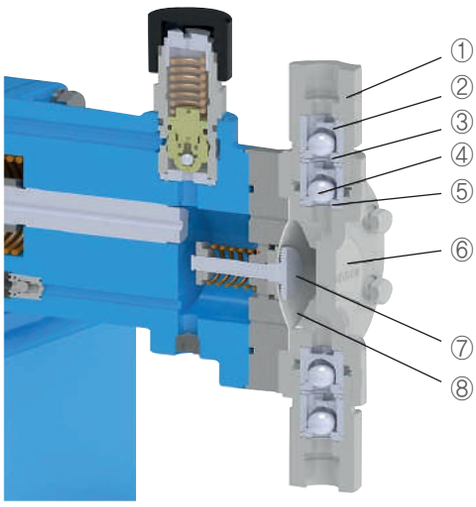

NO	Part Name \ Material	PC 10, 15	PC 22~70	FC	SS
①	Joint	PVC		PVDF	STS316
②	Ball Guide	PP	PVC	PVDF	SSC14A
③	Ball Seat	FKM	PVC	PTFE	STS316
④	Check Ball	CERAMIC		CERAMIC	STS316
⑤	Gasket	FKM		PTFE	PTFE
⑥	Head	PVC		PVDF	SSC14A
⑦	Diaphragm Support	SSC14A (ETFE Coating)		SSC14A (ETFE Coating)	SSC14A
⑧	Diaphragm	PTFE		PTFE	PTFE

Option for Automatic Control & Liquid End Part

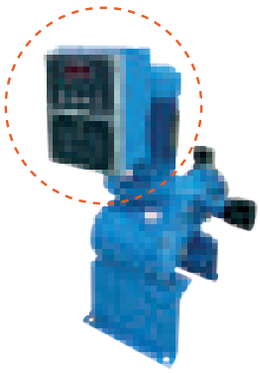

- **BLDC MOTOR**
  - RPM speed control
  - Remote proportional control by 4 ~ 20mA signal
  - Free of worry about motor damage during low speed operation

- **SERVO UNIT**
  - Automatic control of Stroke length
  - Remote proportional control by 4 ~ 20mA signal

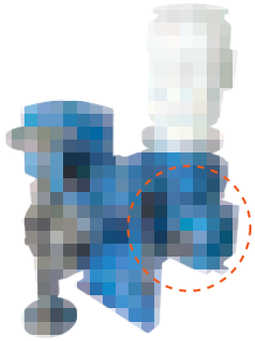

- **Diaphragm damage detection device**
  - Promptly detect diaphragm damage and generate(display) Alarm signal & stop the system

Specifications (Gear Ratio A, B)

Model	Max. Capacity [L/h , (mL/min)]				Max. Discharge Pressure (bar)		Stroke Frequency (SPM)		Weight (Kg)	Motor
	50Hz		60Hz							
	PVC•PVDF	SS316	PVC•PVDF	SS316	PVC•PVDF	SS316	50Hz	60Hz		
BKH-101A	1.8 (30)	0.9 (15)	2.4 (40)	1.2 (20)	15	110	40	48	36	0.2
BKH-102A	4.8 (80)	3.3 (55)	6.0 (100)	4.2 (70)	15	100	80	97		
BKH-103A	7.8 (130)	6.9 (115)	9.6 (160)	8.4 (140)	15	90	120	145		
BKH-104A	9.9 (165)	9.0 (150)	12.0 (200)	10.8 (180)	15	80	160	193		
BKH-151A	6.0 (100)	4.5 (75)	7.2 (120)	5.4 (90)	15	70	40	48	36	
BKH-152A	13.5 (225)	9.9 (165)	16.2 (270)	12.0 (200)	15	50	80	97		
BKH-153A	20.4 (340)	18.3 (305)	24.6 (410)	22.2 (370)	15	40	120	145		
BKH-154A	26.4 (440)	21.9 (365)	31.8 (530)	26.4 (440)	15	35	160	193		
BKH-221A	15.0 (250)	14.4 (240)	18.0 (300)	17.4 (290)	15	32	40	48	38	
BKH-222A	31.8 (530)		38.4 (640)		15	23	80	97		
BKH-223A	47.4 (790)		57.0 (950)		15	19	120	145		
BKH-224A	62.4 (1040)		75.0 (1250)		15	16	160	193		
BKH-321A	33.0 (550)		39.6 (660)		15	15	40	48	40	
BKH-322A	67.8 (1130)		81.6 (1360)		11	11	80	97		
BKH-323A	102.3 (1705)		123.0 (2050)		9	9	120	145		
BKH-324A	135.0 (2250)		162.0 (2700)		8	8	160	193		
BKH-101B	3.9 (65)	1.5 (25)	4.8 (80)	1.8 (30)	15	120	40	48	48	0.4
BKH-102B	8.4 (140)	5.1 (85)	10.2 (170)	6.0 (100)	15	120	80	97		
BKH-103B	12.9 (215)	9.3 (155)	15.6 (260)	10.8 (180)	15	110	120	145		
BKH-104B	17.4 (290)	12.3 (205)	21.0 (350)	15.0 (250)	15	100	160	193		
BKH-151B	10.5 (175)	8.4 (140)	12.6 (210)	10.2 (170)	15	100	40	48	48	
BKH-152B	21.3 (355)	19.5 (325)	25.8 (430)	23.4 (390)	15	70	80	97		
BKH-153B	32.4 (540)	27.9 (465)	39.0 (650)	33.6 (560)	15	58	120	145		
BKH-154B	40.8 (680)	36.9 (615)	49.2 (820)	44.4 (740)	15	50	160	193		
BKH-221B	24.0 (400)	22.8 (380)	28.8 (480)	27.6 (460)	15	46	40	48	51	
BKH-222B	47.4 (790)	46.5 (775)	57.0 (960)	55.8 (930)	15	34	80	97		
BKH-223B	72.0 (1200)	69.9 (1165)	86.4 (1440)	84.0 (1400)	15	27	120	145		
BKH-224B	97.5 (1625)		177.0 (1950)		15	23	160	193		
BKH-321B	49.8 (830)		60.0 (1000)		15	22	40	48	52	
BKH-322B	102.3 (1705)		123.0 (2050)		15	16	80	97		
BKH-323B	152.4 (2540)		183.0 (3050)		13	13	120	145		
BKH-324B	204.9 (3415)		246.0 (4100)		11	11	160	193		
BKH-421B	90.0 (1500)		108.0 (1800)		13	13	40	48	54	
BKH-422B	180.0 (3000)		216.0 (3600)		9	9	80	97		
BKH-423B	270.0 (4500)		324.0 (5400)		7	7	120	145		
BKH-424B	360.0 (6000)		432.0 (7200)		6	6	160	193		

Specifications (Gear Ratio C, D)

Model	Max. Capacity [L/h , (mL/min)]				Max. Discharge Pressure (bar)		Stroke Frequency (SPM)		Weight (Kg)	Motor
	50Hz		60Hz							
	PVC•PVDF	SS316	PVC•PVDF	SS316	PVC•PVDF	SS316	50Hz	60Hz		
BKH-151C	12.3 (205)	9.9 (165)	15.0 (250)	12.0 (200)	15	130	40	48	70	0.75
BKH-152C	24.9 (415)	21.3 (355)	30.0 (500)	25.8 (430)	15	120	80	97		
BKH-153C	39.0 (650)	34.8 (580)	46.8 (780)	42.0 (700)	15	95	120	145		
BKH-154C	52.5 (875)	48.3 (790)	63.0 (1050)	57.0 (950)	15	85	160	193		
BKH-221C	30.0 (500)	27.0 (450)	36.0 (600)	32.4 (530)	15	80	40	48	73	
BKH-222C	60.0 (1000)	54.9 (915)	72.0 (1200)	66.0 (1100)	15	55	80	97		
BKH-223C	87.3 (1455)	82.5 (1375)	108.0 (1800)	99.0 (1650)	15	45	120	145		
BKH-224C	120.0 (2000)	112.5 (1875)	144.0 (2400)	135.0 (2250)	15	40	160	193		
BKH-321C	62.4 (1040)	60.0 (1000)	75.0 (1250)	72.0 (1200)	15	36	40	48	74	
BKH-322C	124.8 (2080)		150.0 (2500)		15	26	80	97		
BKH-323C	187.5 (3125)		225.0 (3750)		15	21	120	145		
BKH-324C	250.0 (4165)		300.0 (5000)		15	18	160	193		
BKH-421C	107.4 (1790)		129.0 (2150)		15	21	40	48	77	
BKH-422C	219.9 (3665)		264.0 (4400)		15	15	80	97		
BKH-423C	330.0 (5500)		396.0 (6600)		12	12	120	145		
BKH-424C	435.0 (7250)		522.0 (8700)		11	11	160	193		
BKH-551C	184.8 (3080)		222.0 (3700)		13	13	40	48	82	
BKH-552C	375.0 (6250)		450.0 (7500)		9	9	80	97		
BKH-553C	564.9 (9415)		678.0 (11300)		7	7	120	145		
BKH-554C	765.0 (12750)		918.0 (15300)		6	6	160	193		
BKH-221D	40.0 (665)	31.5 (525)	48.0 (800)	37.8 (630)	15	130	48	58	82	1.5
BKH-222D	79.8 (1330)	72.3 (1205)	96.0 (1600)	87.0 (1450)	15	95	96	116		
BKH-223D	120.0 (2000)	114.9 (1915)	144.0 (2400)	138.0 (2300)	15	80	144	174		
BKH-321D	87.3 (1455)	82.5 (1375)	105.0 (1750)	99.0 (1650)	15	65	48	58	83	
BKH-322D	174.9 (2915)	169.8 (2830)	210.0 (3500)	204.0 (3400)	15	45	96	116		
BKH-323D	262.5 (4375)	255.0 (4250)	315.0 (5250)	306.0 (5100)	15	38	144	174		
BKH-421D	150.0 (2550)	144.9 (2415)	180.0 (3000)	174.0 (2900)	15	36	48	58	85	
BKH-422D	294.9 (4915)		354.0 (5900)		15	26	96	116		
BKH-423D	435.0 (7250)		522.0 (8700)		15	22	144	174		
BKH-551D	249.9 (4165)		300.0 (5000)		15	22	48	58	92	
BKH-552D	510.0 (8500)		612.0 (10200)		15	15	96	116		
BKH-553D	774.9 (12915)		930.0 (15500)		13	13	144	174		
BKH-701D	420.0 (7000)		504.0 (8400)		14	14	48	58	95	
BKH-702D	849.9 (14165)		1020.0 (17000)		10	10	96	116		
BKH-703D	1290.0 (21500)		1548.0 (25800)		8	8	144	174		

Note) 1. Maximum capacity is tested under standard status(room temperature, clean water)
2. Effective control range of flow rate is 10 ~ 100%, Precision is ±1%FS, and linearity is ±3%FS.
3. Weight is based on flange(SS316 Type) connection & standard motor.
4. Ambient temperature limit is 0 ~ 40 ℃.
5. The limits of liquid temperature are 0~50℃ for PVC and 0~80℃ for PVDF & SS316.
6. The Munsell No. of painting is 0.6PB 4.8/10.6 except motor(The color of motor is maker's standard).
7. Specifications can be changed for improvement without prior notice.

ISO9001 CE

KEMPION

Plunger Metering Pumps

KP

Plunger Type Metering Pumps for High Pressure and Precise Injection

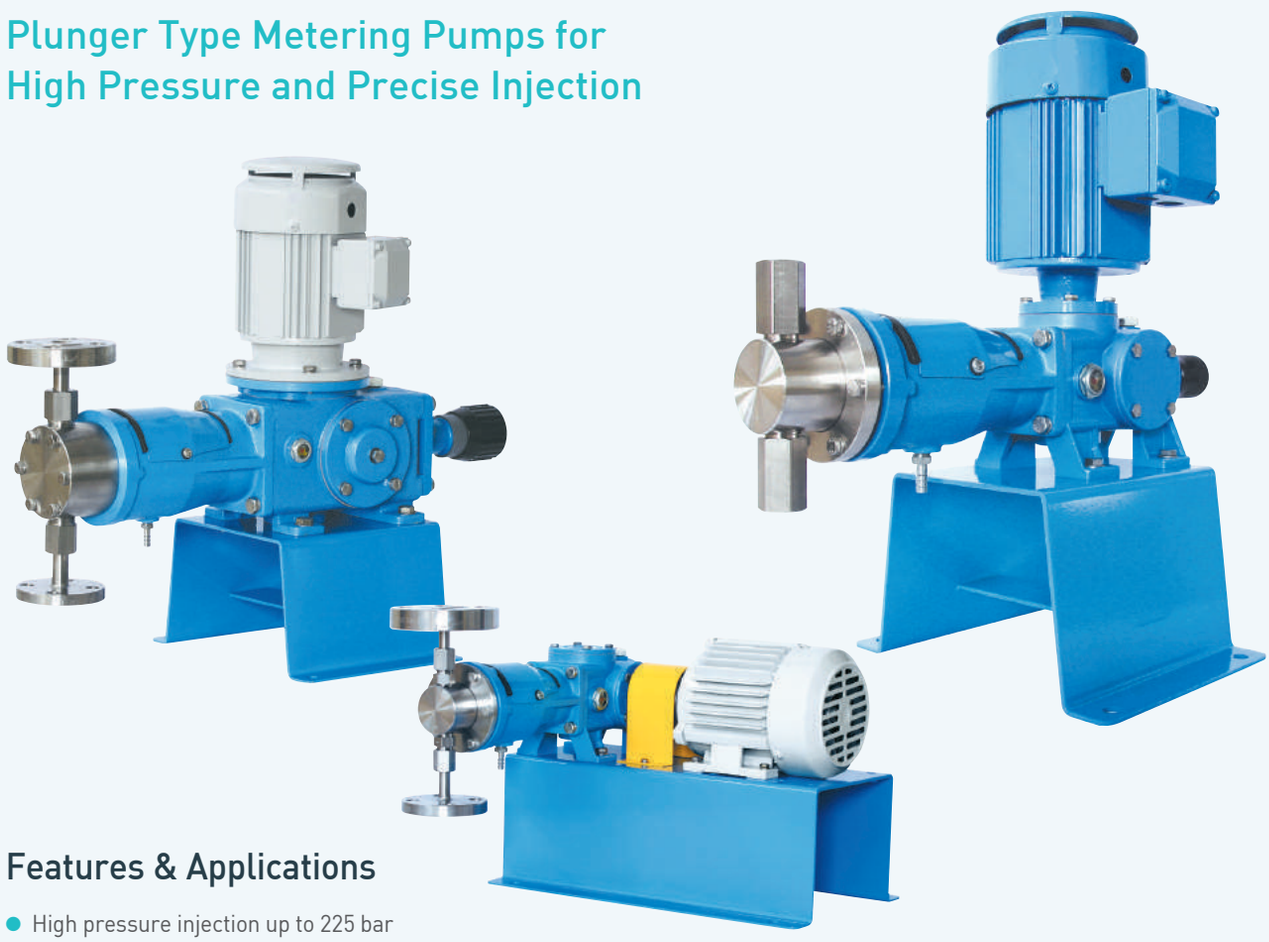

Features & Applications

- High pressure injection up to 225 bar
- Adjustment precise injection in range of 10~3,000mL/min
- Fine control in high pressure by utilizing double check valve
- Minimized leakage by self aligning design, hard & grinded surface of plunger
- Closed construction for treatment of small leakage
- Excellent durability due to robust design

Standard Specifications

Spec. / Model	Max. capacity (mL/min)		Max. discharge pressure (bar)	Stroke frequency (SPM)		Stroke length (mm)	Plunger Diameter (mm)	Connection		Motor (kW)	Weight (kg) Vert. (STS)
	50Hz	60Hz		50Hz	60Hz			Thread	Flange		
KP-061L	10.5	13	160	48	58	10	6	Rc1/4	63K15A	0.2	18/23
KP-062L	21	26	160	96	116						
KP-121L	45	55	160	48	58		12				18/23
KP-122L	90	110	160	96	116						
KP-161L	83	100	160	48	58		16	Rc3/8			19/24
KP-162L	170	205	100	96	116						
KP-221L	162	195	104	48	58		22		40K15A		19/24
KP-222L	332	400	52	96	116						
KP-301L	290	350	56	48	58		30	Rc1/2	20K15A		21/26
KP-302L	614	740	28	96	116						
KP-061M	16.5	20	200	48	58	15	6	Rc1/4	-	0.4	41/44
KP-062M	33	40	200	96	116						
KP-121M	70	85	225	48	58		12				41/44
KP-122M	140	170	225	96	116						
KP-161M	133	160	160	48	58		16	Rc3/8	63K15A		42/45
KP-162M	266	320	160	96	116						
KP-221M	253	305	160	48	58		22				42/45
KP-222M	510	615	85	96	116						
KP-301M	448	540	90	48	58		30	Rc1/2	40K15A		44/47
KP-302M	930	1,120	45	96	116						
KP-401M	845	1,020	50	48	58		40		20K15A		47/50
KP-402M	1,700	2,050	25	96	116						
KP-501M	1,310	1,575	32	48	58		50	Rc3/4	20K20A		48/51
KP-502M	2,710	3,260	16	96	116						

Note) 1. Maximum capacity is the value when Maximum discharge pressure is applied (with pure water at room temperature).
2. The effective flow control range is 10~100% stroke length. The metering accuracy is within ±1%FS. The linearity is within ±2%FS.
3. Explosion proof motor or other special requirement of the motor (except voltage, frequency) can only be met with horizontal type.
4. The standard joint flange indicates the discharge side. In case of the suction side is fixed KS20K flange.
5. The limit of liquid temperature is 0~100℃ and ambient temperature limit is 0~40℃
6. The weight is based on the thread type including standard motor.
7. Self-priming capacity is 1m for Ø6, 2m for Ø12~Ø22, 3m for Ø30~Ø50 of the plunger diameters.
8. The limit of viscosity is 500cP for 6~12 and 1000cP for 16~50 of the plunger diameters.
9. Do not use this pump to transfer liquids constraining slurry.
10. The Munsell No. of painting is 0.6PB 4.8/10.6 except motor. (The color of the motor is manufacturer standard.)
11. The specifications on this catalogue may be revised for improvement without prior notice.

Model Code

KP V – ☐ – 30 1 L – S T – S

Series name
KP
(Plunger Type)

Drive box type
V: Vertical
(Motor direct joint)
H: Horizontal
(Motor indirect joint)

Option
No Mark: No option
A: BLDC M/C UNIT
B: SERVO UNIT

Plunger diameter
30 : Plunger Dia. 30mm

Stroke speed
1 : 58(48)SPM
2 : 116(96)SPM
※ ( ) is 50Hz

Drive box size
L : 0.2kW Class
M : 0.4kW Class

Liquid End material
S : Standard
X : Special

Connection
T : Thread
F : Flange
X : Special

Power supply
S: 3 Phase 60Hz 220/380V
A: 3 Phase 60Hz 440V
X: Special

Standard Liquid End Material

• Thread Type

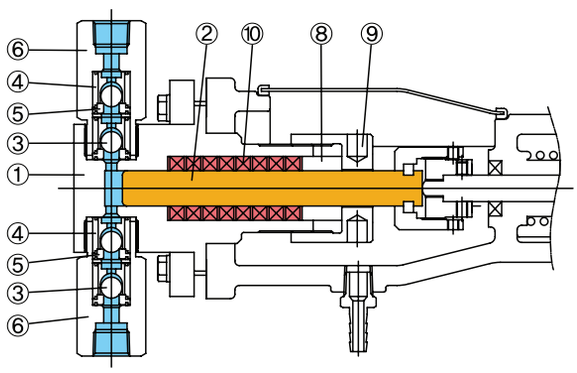

NO.	Parts Name	Materials
①	Head	SS316
②	Plunger	SS316+HCr
③	Check Ball	SS316
④	Ball Guide	SS316
⑤	Ball Seat	SS316

• Flange Type

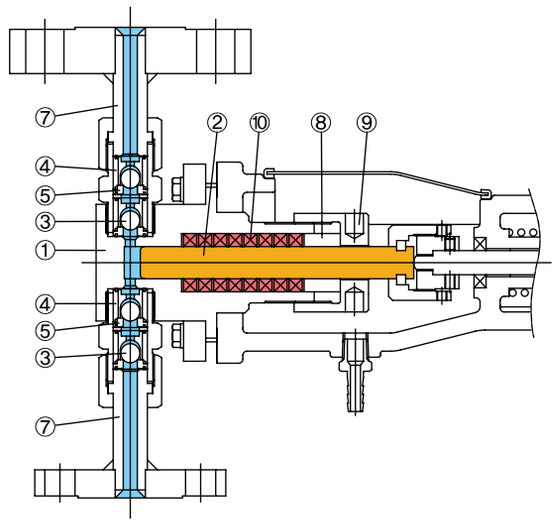

NO.	Parts Name	Materials
⑥	Joint (Thread)	SS316
⑦	Joint (Flange)	SS316
⑧	Gland Ring	SS316
⑨	Gland Nut	SS316
⑩	Gland Packing	PTFE + ARAMID

Dimension

(Unit:mm)

KPV-061L~302L

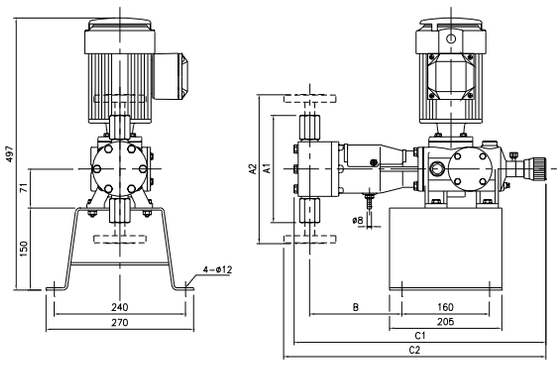

Model \ Size	A1	A2	B	C1	C2
KPV-061L,062L	128	222	162	440	485
KPV-121L,122L	128	222	165	442	488
KPV-161L,162L	152	234	172	452	495
KPV-221L,222L	158	240	173	453	493
KPV-301L,302L	196	272	169	460	479

KPH-061L~302L

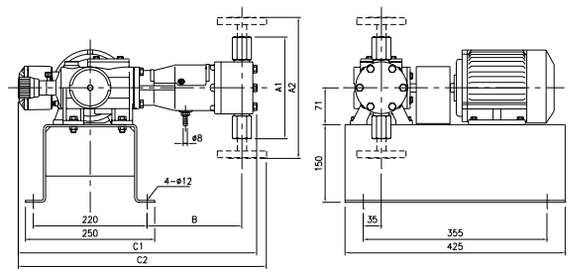

Model \ Size	A1	A2	B	C1	C2
KPH-061L,062L	128	222	177	440	485
KPH-121L,122L	128	222	179	442	488
KPH-161L,162L	152	234	186	452	495
KPH-221L,222L	158	240	187	453	493
KPH-301L,302L	196	272	183	460	479

KPV-061M~502M

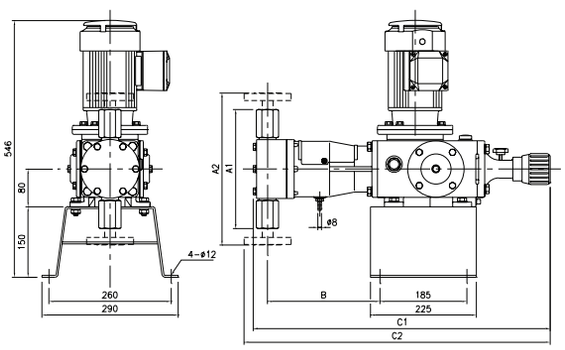

Model \ Size	A1	A2	B	C1	C2
KPV-061M,062M	128	-	232	609	-
KPV-121M,122M	128	-	234	611	-
KPV-161M,162M	152	234	241	621	664
KPV-221M,222M	158	240	242	622	665
KPV-301M,302M	196	272	238	629	658
KPV-401M,402M	221	297	238	629	648
KPV-501M,502M	253	323	239	632	652

KPH-061M~502M

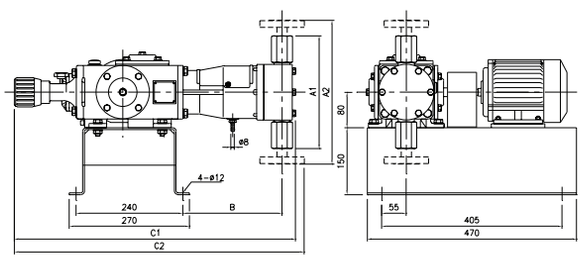

Model \ Size	A1	A2	B	C1	C2
KPH-061M,062M	128	-	216	609	-
KPH-121M,122M	128	-	218	611	-
KPH-161M,162M	152	234	225	621	664
KPH-221M,222M	158	240	226	622	665
KPH-301M,302M	196	272	222	629	658
KPH-401M,402M	221	297	222	629	648
KPH-501M,502M	253	323	223	632	652

※The above specifications and design could be changed for improvement without prior notice.

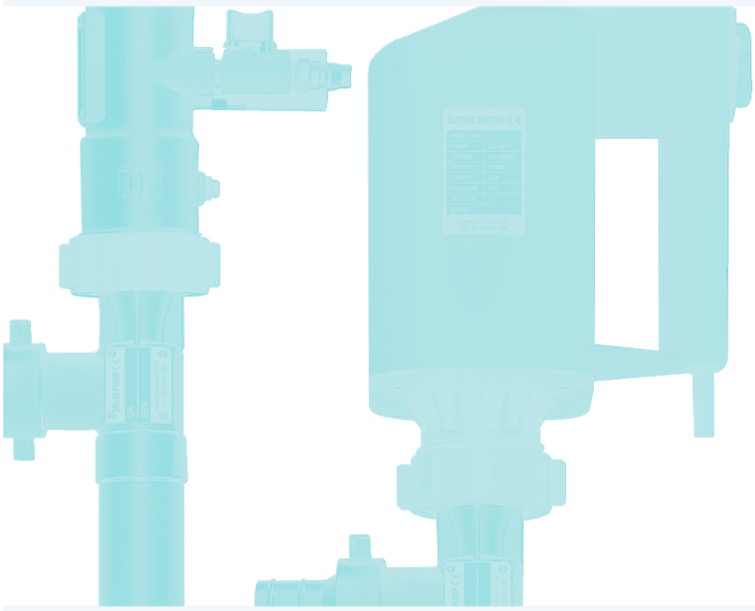

ISO9001 CE ATEX

KEMPION

Drum Pumps

DR

Drum and Container Pumps

Features & Applications

- Removing unstable elements of pump performance with sealless structure
- Maintenance cost can be reduced remarkably due to the robust degin against the indeliberate dry run for a short period. (Max. 15 minutes)
- Preventing motor damage by installing of dual safety device in the motor
- Easy operation and simple part replacement To transfer from plating facility, chemical plant or chemical warehouse, or to decant into small units
- To transfer or refill chemicals in metal factory or waste processing facilities
- To refill chemicals in research centers or hospitals
- To transfer chemicals in power plants and public institutes
- To decant organic/inorganic chemicals and high viscosity chemicals into small units from drum, container or can

Specifications of Electric Motor

Power	420~430W	RPM	10,000RPM
Voltage	220~230VAC	Protection grade	IP44
Frequency	50/60Hz	Insulation grade	B
Current	2.8A	Weight	3.0~3.1kg

Specifications of Air Motor

Supply Pressure	3~6bar	Rated Output	460W
Rated Speed	10,000RPM	Air Consumption	920L/min
Ex-proof Class	Ex II 2 G cp IIC T6	Weight	1.2kg

※ Cerificate Number of Expiosion Proof : 0425 ATEX 2535

Drum Pump (Electric Motor)

Material	PP		PVDF		STS316	
Type	DR-PL Low Head	DR-PH High Head	DR-FL Low Head	DR-FH High Head	DR-SL Low Head	DR-SH High Head
Max. Flow Rate (L/min)	130	80	130	80	160	90
Max. Head (m)	8	21	8	21	7.5	17
Max. Viscosity (mPas)	200	800	200	800	150	600
Max. Specific Gravity	1.3	1.6	1.3	1.6	1.3	1.6
Dia. for Hose connection (mm)	25		32	25	25	

Drum Pump (Air Motor)

Material	PP		PVDF		STS316	
Type	DR-PL Low Head	DR-PH High Head	DR-FL Low Head	DR-FH High Head	DR-SL Low Head	DR-SH High Head
Max. Flow Rate (L/min)	135	85	135	85	165	95
Max. Head (m)	8.5	22	8.5	22	8	18
Max. Viscosity (mPas)	1000	1200	1000	1200	400	800
Max. Specific Gravity	1.4	1.8	1.4	1.8	1.4	1.8
Dia. for Hose connection (mm)	25		32	25	25	

DR-Electric Motor

Features & Applications

- Dual prevention of motor from damage caused by overload through installing Thermal Protection device(TP) and over-current breaker internally
- By installing low voltage release device(Optional), preventing motor damage caused by low voltage
- Dual wall type motor housing prevents damages from external impacts
- 5m long power cable is equipped with plug as standard item.

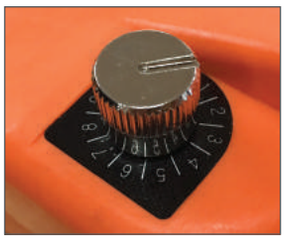

Speed control device (Optional)

Flow can be controlled easily with the motor speed(RPM)dial, so that stability can be improved in transferring corrosive liquid, and operating cost can be reduced as well by decreasing of motor power consumption with the low speed.

Specifications

Specification		Specification	
Power	420~430W	RPM	10,000RPM
Voltage	220~230VAC	Protection grade	IP44
Frequency	50/60Hz	Insulation grade	B
Current	2.8A	Weight	3.0~3.1kg

Model Code

DR – P L S – 10 – U 4 S – S

- **Pump model**: Drum Pump
- **Pipe material**: P: PP; F: PVDF; S: SS316
- **Capacity features**: L: Low head; H: High head
- **Shaft material**: S: SS316; H: HASTELLOY; T: TITANIUM
- **Pipe length**: 07: 700mm; 10: 1000mm; 12: 1200mm
- **Motor type**: U: Universal motor
- **Motor power**: 4: 420W
- **Motor option**: S: Standard type; A: Speed control; B: Speed control & Low voltage release
- **Motor voltage**: S: 220~230V 50/60Hz

DR-Air Motor

Features & Applications

- Simple structure
- Can be used for explosion proof area (Ex II 2G)
- More light than electric motor
- Easy speed control by supply pressure
- Suction Dia.: Rc1/4, Discharge Dia.: Rc1/2

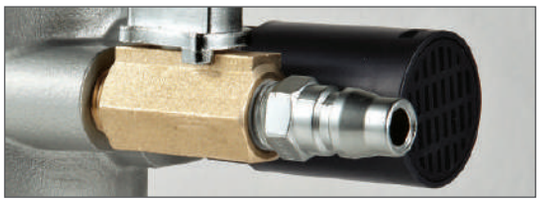

Specifications

Specification		Specification	
Supply Pressure	3~6bar	Rated Output	460W
Rated Speed	10,000RPM	Air Consumption	920L/min
Ex-proof Class	Ex II 2 G cp IIC T6	Weight	1.2~1.3kg

※ Certificate Number of Explosion Proof : 0425 ATEX 2535

Model Code

DR – P L S – 10 – A 4 – 1

- **Pump model**: Drum Pump
- **Pipe material**: P: PP; F: PVDF; S: SS316
- **Capacity features**: L: Low head; H: High head
- **Shaft material**: S: SS316; H: HASTELLOY; T: TITANIUM
- **Pipe length**: 07: 700mm; 10: 1000mm; 12: 1200mm
- **Motor type**: A: Air Motor
- **Motor power**: 4: 460W
- **Valve type**: 1: Ball Valve

ISO9001 CE

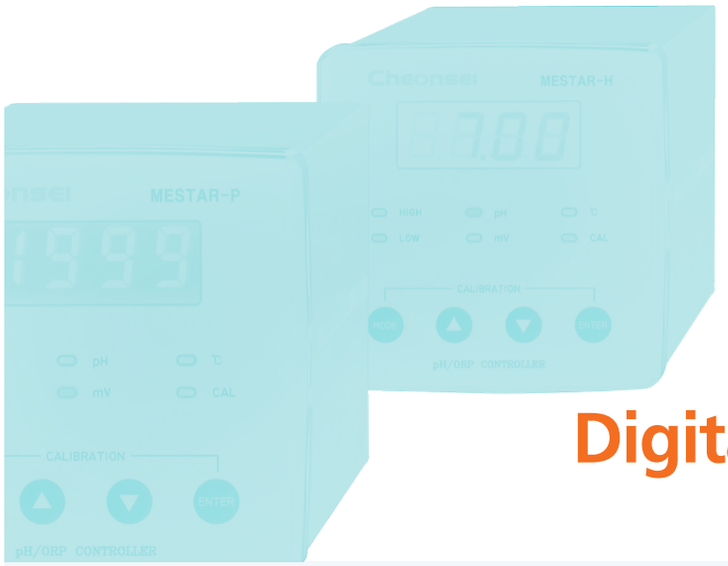

KEMPION

Digital pH/ORP Controller

MESTAR

Features & Applications

- pH/ORP Selection function between pH & ORP
- Convenient Automatic Calibration
  - Zero : pH 7
  - Span : pH 4 or pH 9
- Selection of the display which is suitable for using condition
  - MESTAR-H Series : LED Display
  - MESTAR-P Series : LCD Display (Back Light version)
- Isolated Analog Output
  - Process : Measured value of pH or ORP
  - Temp.(Option) : Measured value of temperature
- Output of dry contact point at maximum & minimum setting
  - Dead-Band setting
- Data backup in the EEPROM
- Self-Diagnostic function
- Temperature compensation of measured pH value (Option)
- Full-duplex communication of RS-422 Multi Drop (Option)

MESTAR-P | LCD Display

MESTAR-H | LED Display

Specification

Specification	Performance
Measuring Range	0~14pH, -1999~1999 mV, -10~100°C
Resolution	0.01pH, 1mV, 0.1°C
Display	$3^1/_2$ Digit LED or $3^1/_2$ Digit LCD
Analog Output	DC 4~20 mA 2 Channel (TEMP.Option)
Output of Dry Contact Point	Dry contact output of the two points operated by On/Off
Dimensions	96mm(W)x96mm(H)x131mm(D)

Specification	Performance
Self-Diagnostic function	Over measurement range - Err1 Calibration failure - Err2 System operation errors - Err3
Case	Anti-static ABS
Power Source	AC 110/220V 50/60Hz
Weight	780g

Model Code

MESTAR – H S 1

Display
H: LED Display
P: LCD Display

Controller
S: Standard (No Option)
C: Communication
T: Temp. Compensation
X: Communication + Temp.Compensation

Electrode
0: Without Electrode
1: GS-5
2: GSH-5
3: MS-5
4: GST-5
5: GSTH-5
6: GSA-5
7: GSTA-5
8: HPB-13

Standard Components of Set

Special shielded cable
(For Temp. compensation)

Connection box

Electrode holder

Electrodes

Beaker

Standard buffer powder & bottle

KCl solution & bottle

Components	Qty
pH/ORP controller	1 Set
Electrode	1 Set
Connection box coated with special film	1 Set
High isolated special shield cable	20 m
Holder (PE)	1 Set
Bracket for holder	1 Set
KCl solution (3.3mol/123g)	1 packet
KCl bottle (500cc, PE)	1 EA
Beaker (500cc, PE)	1 EA
Calibration liquid bottle (500cc, PE)	2 EA
Standard buffer powder	each 2 packets
Instruction manual	1 book

※ Components of set are changed according to model codes.
※ Optional Items : Connection cable Quinhydrone powder, Holder, Stand Panel

Electrode Specification

Model	Use	Measuring range	Using Temp.	Cable length	Internal liquid	Code
GS-5	pH	0~14pH	0~40°C	4m	3.3mol KCl	1
GSH-5	pH	0~14pH	0~80°C	4m	3.3mol KCl	2
MS-5	ORP	±0~1999mV	0~40°C	4m	3.3mol KCl	3
GST-5	pH Temp. compensation	0~14pH	0~40°C	4m	3.3mol KCl	4
GSTH-5	pH Temp. compensation	0~14pH	0~80°C	4m	3.3mol KCl	5
GSA-5	pH Supplement free	0~14pH	0~80°C	4m	3.3mol KCl	6
GSTA-5	pH Temp. compensation & supplement free	0~14pH	0~80°C	4m	3.3mol KCl	7
HPB-13	pH for Fluoride,Temp. compensation & supplement free	0~14pH	0~80°C	4m	3.3mol KCl	8

Cheonsei IND. CO.,LTD

40, Ansantekom-gil, Sangnok-gu, Ansan-si, Gyeonggi-do, Korea
Tel. : +82-31-508-1003 Fax : +82-31-419-3223
E-mail : cheonsei@cheonsei.co.kr Homepage : www.cheonsei.co.kr